Fluid Power Actuators and Control Systems

rotork®
Fluid Systems

Established Leaders in Valve Actuation

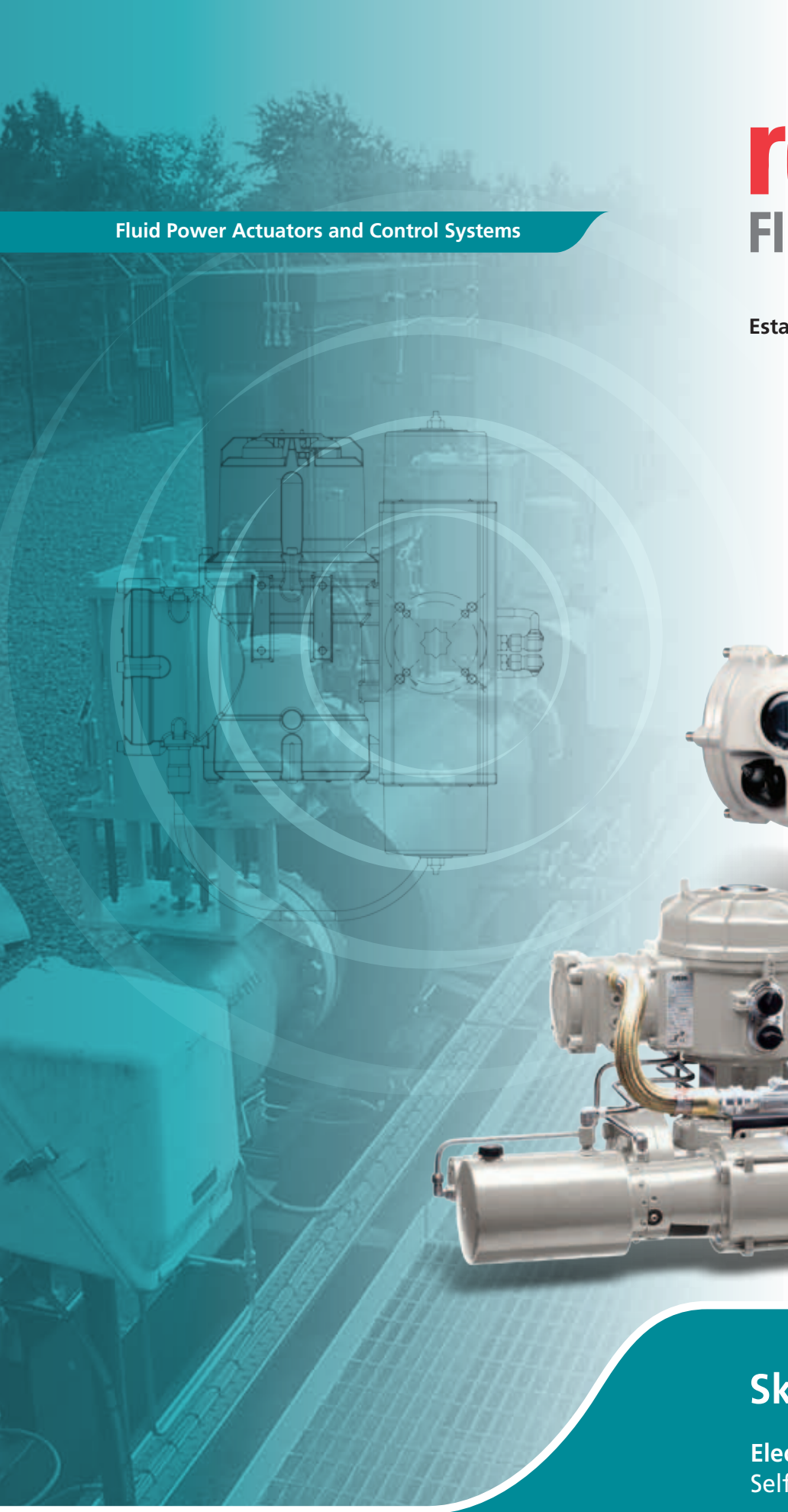

Skilmatic Range

Electro-Hydraulic
Self Contained Failsafe Actuators

Publication F700E Issue 05/09

Rotork Actuators – Quality Controlled

In the 50 years since the company was founded, Rotork has become the standard for excellence in the field of valve and damper automation for the oil, gas, power, water and waste treatment industries around the world.

As established leaders in actuation technology, we owe our success to a commitment to quality at every stage, and at every level, of Rotork's operations.

With several fluid power manufacturing facilities in Europe and the United States, and additional *Centres of Excellence* strategically located around the globe, we are able to offer solutions and design systems for virtually any application — from subsea hydraulics to the most sophisticated yet simple control system.

Contact Rotork for your operational or safety application requirements. We will work with you from conception, to design, to manufacture, to installation, and finally to maintenance and service support.

Skilmatic Range

Reliability by design

The Rotork Fluid Systems Skilmatic range of self-contained, electro-hydraulic actuators are the result of Rotork's ongoing commitment to product development utilising leading edge technology. The Skilmatic range includes SI, SB and EH actuators.

The SI & SB actuators combine the simplicity of electrical operation with the precision of hydraulic control and the reliability of spring-powered failsafe action. The actuators use an internal spring-return mechanism to provide the most reliable means of positioning a valve to a safe condition. They can be failsafe to close, open, or lock-in-last position on power, ESD or system failure.

EH actuators offer the flexibility of customisation to suit the application. They feature an integrated control module; a hydraulic manifold; and a power unit consisting of a motor, hydraulic pump and reservoir. They are available in double-acting or spring-return configurations for both quarter-turn and linear applications.

Features	Benefits
• Self-contained electrically operated.	• Reduced installation and maintenance costs.
• Failsafe spring or accumulator powered.	• Most reliable means of positioning a valve in a safe position on loss of power or signal.
• Two-position control & ESD.	• Designed for safety critical applications.
• Partial stroking capability.	• Confirms valve availability and minimises plant shutdown.
• Modulating control 4-20 mA input / output with resolution better than 0.25%.	• Improved process control and product quality.
• LCD display for position, pressure and fault diagnostics.	• Provides local operator information.
• Integral controls with infrared non-intrusive setting.	• Complete sealing allows calibration and interrogation of the actuator in all environments.
• Double-sealed terminal compartment.	• Environmental protection maintained for internal components during installation and commissioning.
• Optional fieldbus communications.	• Interfaces with a variety of communication networks.
• Watertight up to and including IP68.	• Suitable for harsh environments including immersion up to 7 m.
• Flameproof / Explosionproof models.	• Suitable for Zone 1 / Division 1 hazardous areas.

Skilmatic Range – Electro-Hydraulic self-contained actuators

SI Quarter-turn Actuators

Failsafe spring-return.

Torque output to
4,400 Nm (39,000 lbf-in).

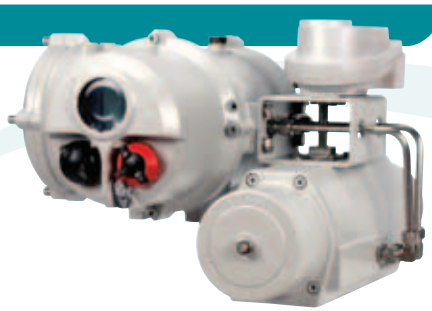

EH Quarter-turn Actuators

Double-acting and spring-return.

Torque output to
600,000 Nm (5.3 Million lbf-in).

SI Linear Actuators

Failsafe spring-return.

Thrust output to
61 kN (13,700 lbf).

EH Linear Actuators

Double-acting and spring-return.

Thrust output to
5,500 kN (1.2 Million lbf).

SI Quarter-turn Actuators

Size 1 actuator shown

Intelligent Design

The SI-Q are compact and robust electrically operated failsafe spring-return quarter-turn actuators. Designed for two-position, ESD or modulating control for all types of ball, butterfly, plug valves and dampers.

Consisting of a self-contained electro-hydraulic control module and scotch yoke drive, the actuators are available as spring-return (clockwise or anticlockwise) or lock-in-last position. Single-phase, three-phase, or 24 VDC power supply options are available. Although available on all SI and EH actuators, the following features are specifically relevant to quarter-turn applications.

ESD

SI-Q actuators are specifically designed for emergency shutdown (ESD) applications with a discrete input signal. The ESD signal can be configured to control the shutdown through the internal processor or a hardwired circuit by-passing the processor. Various closing speeds are available to meet application requirements.

Partial Stroking

Partial stroking is available as standard and allows for testing of the valve with minimal affect on the process. All key components within the actuator including valve torque and movement are tested to confirm availability for shutdown on demand.

For safety critical applications the actuator is designed to meet up to SIL 3 standards with hardwired ESD. Alarms are indicated through both the local LCD display and alarm relay outputs. Mean Time Between Failures (MTBF) and Probability to Fail on Demand (PFD) calculations can be provided to suit the specific application.

SI-Q Range Performance Table

Actuator Size		Torque (Nm)						Stroke Speed (Seconds)	
Clockwise	Anti-clockwise	Hydraulic Stroke			Spring Stroke			Hydraulic	Spring
		Start	Mid	End	Start	Mid	End		
SI-1-Q31	SI-1-QA31	95	42	60	93	40	65	15	1.5 to 5.5
SI-1-Q41	SI-1-QA41	190	95	120	180	100	140	30	2 to 10
SI-1-Q51	SI-1-QA51	290	1400	170	325	170	240	50	4 to 15
SI-1-Q60	SI-1-QA60	720	360	500	500	260	380	95	6 to 29
SI-1-Q61	SI-1-QA61	620	300	350	630	340	480	95	6 to 29
SI-2-Q60	SI-2-QA60	720	360	500	500	260	380	14	8 to 14
SI-2-Q61	SI-2-QA61	620	300	350	630	340	480	14	8 to 14
SI-2-Q70	SI-2-QA70	1,650	718	885	1,160	570	800	30	12 to 30
SI-2-Q80	S-I2-QA80	3,350	1,450	1,780	2,350	1,150	1,605	55	25 to 55
SI-2-Q110	SI-2-QA110	4,422	4,422	2,850	3,820	1,892	2,381	70	20 to 70
SI-2-Q111	SI-2-QA111	6,428	3,290	4,544	5,033	2,527	3,255	110	28 to 110
SI-2-Q112	SI-2-QA112	5,264	2,447	2,852	6,433	3,301	4,407	110	28 to 110

Note - Torque in lbf-in is 8.85x Nm figure.
Table reflects standard sizes. Alternative sizes and stroke speeds are available. See product specification sheets for full details.

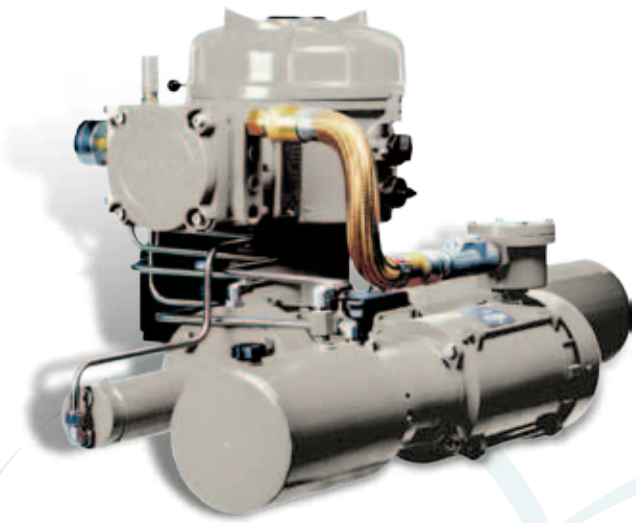

Intelligent Design

EH-Q actuators offer the flexibility of customisation to suit specific applications. The actuators are self-contained, as with all Skilmatic products, eliminating the installation and maintenance cost associated with conventional hydraulic systems having a central hydraulic power unit with supply and return lines.

The range includes an integrated control module with hydraulic manifold; a power unit consisting of a motor, hydraulic pump and reservoir; and a spring-return or double-acting scotch yoke actuator from our extensive range. Optional accumulators and various hydraulic pump sizes are available to suit the required operating speed and application.

They can be configured to mount in any position and can also be supplied with remote mounting of the hydraulic power unit when space is an issue. The EH-Q can also operate with an existing hydraulic power unit; the HPU must operate with compatible hydraulic fluid and pressures.

EH-Q actuators are specifically designed for two-position and emergency shutdown (ESD) applications with the option of partial stroke testing for all types of ball, butterfly, plug valves and dampers. The actuators can also be configured for modulating control from a 4-20 mA input signal with a resolution <0.5% with the option of slow mode control.

They are available in various voltages for single-phase, three-phase, or 24 VDC power supplies and are watertight to a minimum of IP54 with the option of up to IP67. Explosionproof models are certified to FM, CSA, ATEX, IEC Ex or Gost.

EH actuators offer the same features as the SI range: non-intrusive setting, LCD display, double-sealed terminal compartment, lockable local controls and field communications.

Consult Rotork Fluid Systems with your specific requirements.

EH-Q Range Performance Table

Actuator Type	Valve Seat Torque (Nm)			Stroke Speed (Seconds) Hydraulic Direction			Stroke Speed (Seconds) Spring Direction		
EH-Q-SR (Spring-Return)	2,000	to	210,000	5	to	425	2	to	200
EH-Q-DA (Double-Acting)	1,000	to	600,000	5	to	325	N/A	to	N/A

Note - Torque in lbf-in is 8.85x Nm figure.
Table reflects standard sizes. Alternative sizes and stroke speeds are available. See product specification sheets for full details.

SI Linear Actuators

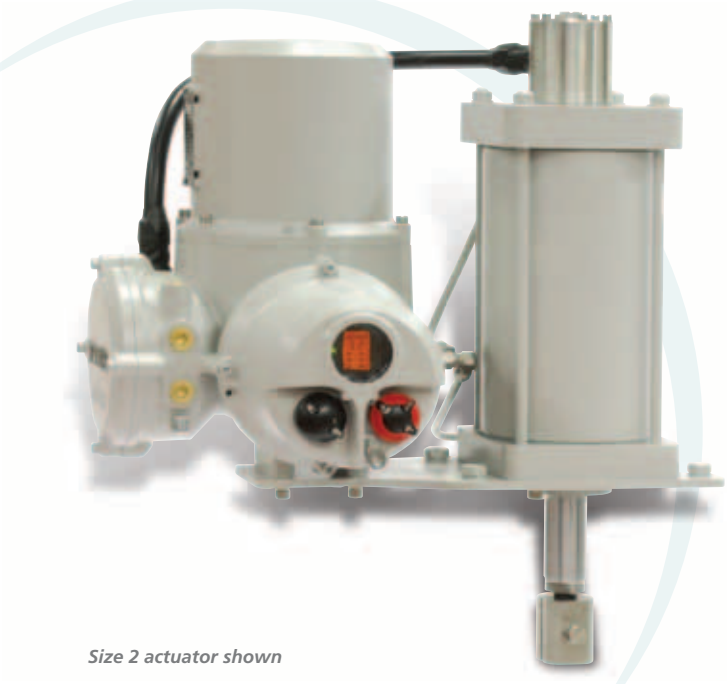

Size 2 actuator shown

Intelligent Design

The SI-L are compact and robust electrically operated linear actuators designed for modulating control and are equally suited for two-position or ESD applications. The control module provides a pulsed hydraulic output to accurately position the spring-opposed linear cylinder, and is suitable for all styles of control valves with a linear drive shaft. They are available as spring-extend, spring-retract or lock-in-last position on loss of power or signal with standard strokes up to 105 mm (4”). Various single-phase, three-phase, or 24 VDC power supply options are available. Although available on all SI and EH actuators, the following feature is specifically relevant to linear control applications.

Modulating Control

SI-L actuators are designed for modulating control application and can be calibrated with our infrared setting tool to accept various forms of analogue or digital input. A wide range of functions such as zero, span, deadband and hysteresis can be configured without removing any covers. They accept 4-20 mA or 0-10 VDC input to accurately position a control valve with a resolution better than 0.2%. They will also provide a 4-20 mA output of valve position and can be either internally or externally powered.

SI-L Range Performance Table

Spring to extend actuator drive shaft:

Actuator Size		Thrust (kN)				Stroke Speed (mm/sec)	
Spring to Extend	Stroke (mm)	Hydraulic Stroke (Open)		Spring Stroke (Close)		Hydraulic	Spring
		Start	End	Start	End		
SI-1-L80/40	40	2.08	1.26	2.64	1.76	4	8.8 to 40
SI-1-L100/40	40	3.7	2.04	4.29	2.86	2.3	4.4 to 20
SI-1-L125/65	65	6.13	3.57	6.6	4.4	1.52	3.6 to 21
SI-1-L160/65	65	9.73	5.39	11.22	7.48	0.96	2.2 to 13
SI-1-L200/65	65	15.42	8.51	17.82	11.88	0.60	1.6 to 8
SI-2-L200/105	105	15.42	8.52	17.82	11.88	4.2	4.2 to 14
SI-2-L250/105	105	23.88	13.14	27.71	18.48	2.6	2.6 to 8.8
SI-2-L280/105	105	30.17	16.62	34.98	23.32	2.0	2.0 to 7.0
SI-2-L320/105	105	39.47	21.57	46.2	30.8	1.6	1.6 to 5.4
SI-2-L350/105	105	47.9	26.68	54.78	36.52	1.3	1.3 to 4.4
SI-2-L400/105	105	62.22	34.09	72.6	48.4	1.0	1.0 to 3.4
SI-2-L450/105	105	78.75	42.95	92.4	61.6	0.8	0.8 to 2.7

Spring to retract actuator drive shaft:

Actuator Size		Thrust (kN)				Stroke Speed (mm/sec)	
Spring to Retract	Stroke (mm)	Hydraulic Stroke (Close)		Spring Stroke (Open)		Hydraulic	Spring
		Start	End	Start	End		
SI-1LA80/40	40	2.79	1.78	2.59	1.73	4	8.8 to 40
SI-1LA100/40	40	4.42	2.88	3.97	2.64	2.3	4.4 to 20
SI-1LA125/65	65	6.84	4.41	6.29	4.19	1.52	3.6 to 21
SI-1LA160/65	65	11.39	7.49	10.07	6.71	0.96	2.2 to 13
SI-1LA200/65	65	17.93	11.9	15.56	10.38	0.60	1.6 to 8
SI-2-LA200/105	105	17.93	11.9	15.56	10.38	4.2	4.2 to 14
SI-2-LA250/105	105	27.94	18.49	24.42	16.28	2.6	2.6 to 8.8
SI-2-LA280/105	105	35.14	23.32	30.52	20.35	2.0	2.0 to 7.0
SI-2-LA320/105	105	46.14	30.81	39.56	26.37	1.6	1.6 to 5.4
SI-2-LA350/105	105	54.97	36.52	47.62	31.74	1.3	1.3 to 4.4
SI-2-LA400/105	105	72.26	48.4	61.6	41.06	1.0	1.0 to 3.4
SI-2-LA450/105	105	91.69	61.61	77.65	51.77	0.8	0.8 to 2.7

Note - Thrust lbf-in is 224.8x kN figure.
Table reflects to standard sizes. Alternative sizes and stroke speeds are available. See product specification sheets for full details.

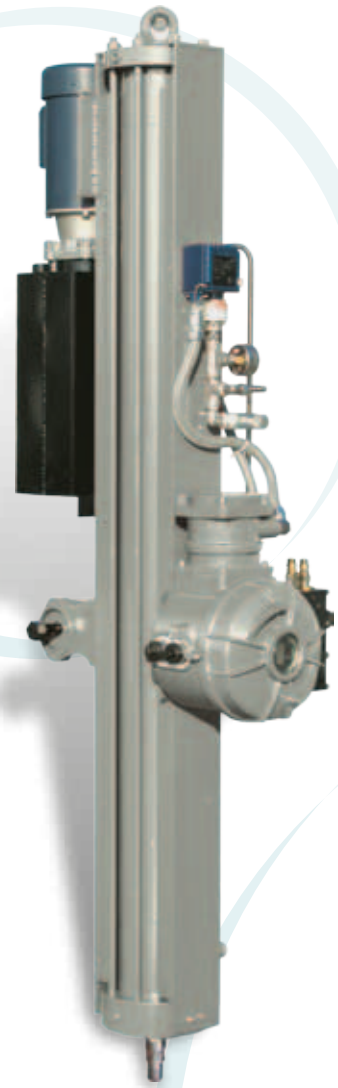

Intelligent Design

EH-L actuators offer the flexibility of customisation to suit specific applications. The actuators are self-contained, as with all Skilmatic products, eliminating the installation and maintenance cost associated with conventional hydraulic systems having a central hydraulic power unit with supply and return lines.

The range includes an integrated control module with hydraulic manifold; a power unit consisting of a motor, hydraulic pump and reservoir; and a spring-return or double-acting scotch yoke actuator from our extensive range. Optional accumulators and various hydraulic pump sizes are available to suit the required operating speed and application. The range is available with strokes up to 343 mm (13.5”).

They can be configured to mount in any position and can also be supplied with remote mounting of the hydraulic power unit when space is an issue. The EH-L can also operate with an existing hydraulic power unit; the HPU must operate with compatible hydraulic fluid and pressures.

EH-L actuators are specifically designed for two-position and emergency shutdown (ESD) applications with the option of partial stroke testing for globe, gate valves and dampers. The actuators can also be configured for modulating control from a 4-20 mA input signal with a resolution <0.5% with the option of slow mode control.

They are available in various voltages for single-phase, three-phase, or 24 VDC power supplies and are watertight to a minimum of IP54 with the option of up to IP67. Explosionproof models are certified to FM, CSA, ATEX, IEC Ex or Gost.

EH actuators offer the same features as the SI range: non-intrusive setting, LCD display, double-sealed terminal compartment, lockable local controls and field communications.

Consult Rotork Fluid Systems with your specific requirements.

EH-L Range Performance Table

Actuator Type	Valve Seat Thrust (kN)			Spring Speeds (mm/sec) Hydraulic Direction			Spring Speeds (mm/sec) Spring Direction		
EH-L-SR (Spring-Return)	25	to	150	300	to	0.5	300	to	0.5
EH-L-DA (Double-Acting)	10	to	5,500	300	to	0.5	N/A	to	N/A

Note - Thrust lbf-in is 224.8x kN figure.
Table reflects standard sizes. Alternative sizes and stroke speeds are available. See product specification sheets for full details.

Principles of Operation

SI-1 Actuators

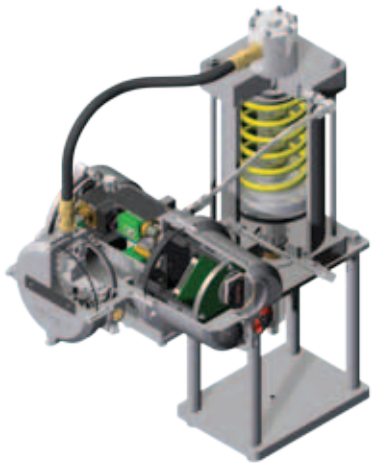

The actuators operate on a pump and bleed principle and utilise the Skilmatic dual oscillating pumps to provide instantaneous hydraulic pulses in one direction and spring-return in the opposite (bleed) direction, providing inherently accurate control.

Actuator commanded to Open from the Closed limit. The bleed solenoid valve(s), and pumps are energised. The system pressure acts against a spring opposed piston to drive the actuator in the open direction.

Actuator commanded to Stop, or reaches the Open limit. The pumps are de-energised and the bleed solenoid valve(s) remain energised, the system pressure is maintained to hold the actuator position.

Actuator commanded to Close, reach the Closed limit or loss of ESD. The bleed solenoid valve(s), and dual oscillating pumps are de-energised. Pressure is released; the hydraulic fluid returns to the reservoir and the springs return the drive shaft to the closed or safe position.

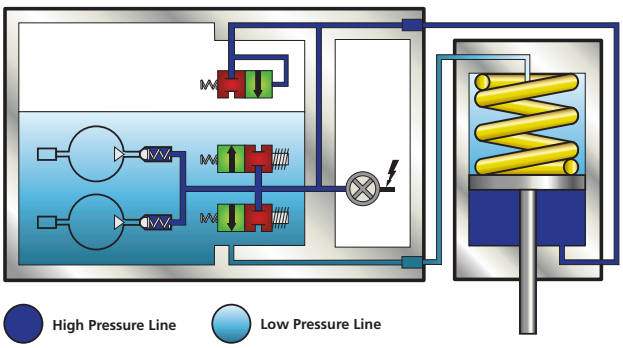

**Diagram shows Linear configuration*

SI-2 Actuators

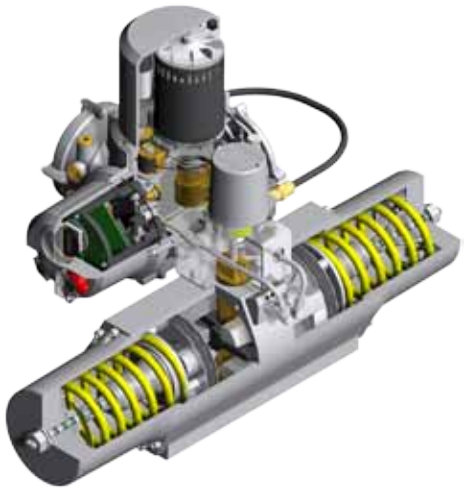

The actuators operate on a pump and bleed principle utilising a motorised vane pump to provide hydraulic pressure in one direction and spring-return in the opposite (bleed) direction.

Actuator commanded to Open from the Closed limit. The bleed solenoid valve(s) are energised. The motorised vane pump is started under no-load condition as a result of the delay in energising the by-pass solenoid valve. With the by-pass solenoid energised, the system pressure acts against a spring opposed piston to drive the actuator in the open direction.

Actuator commanded to Stop or reaches the Open limit. The by-pass solenoid valve is de-energised, followed by the motorised vane pump after 5 seconds unless a new command to Open is given. The bleed solenoid valve(s) remain energised and the system pressure is maintained to hold the actuator position.

Actuator commanded to Close, reach the Closed limit or loss of ESD. The by-pass solenoid valve, bleed solenoid valve(s), and motorised vane pump are de-energised. Pressure is released; the hydraulic fluid returns to the reservoir and the springs return the drive shaft to the closed or safe position.

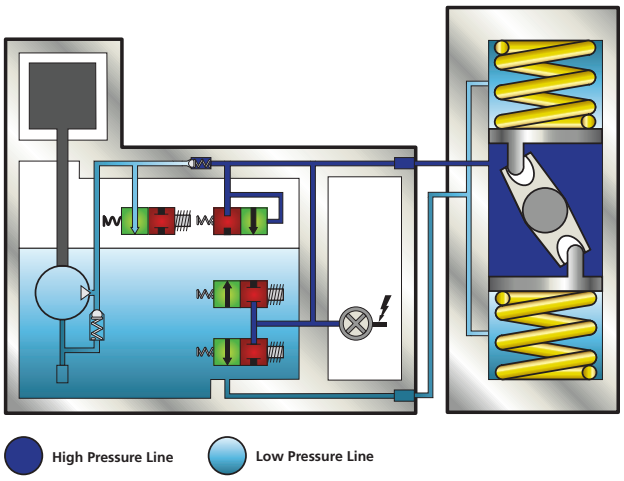

**Diagram shows Quarter-turn configuration*

EH Actuators

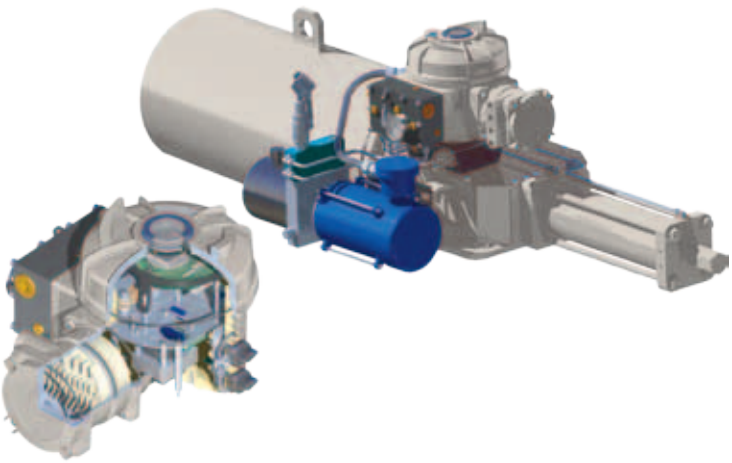

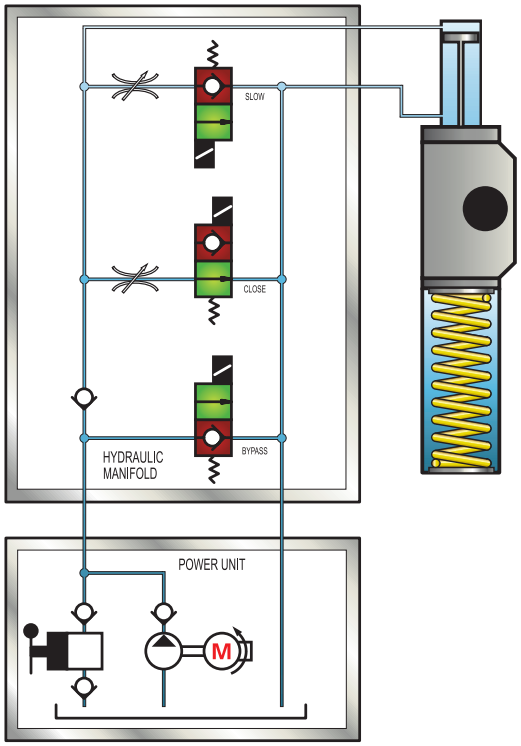

Above: Spring-return.

Below: Double-acting.

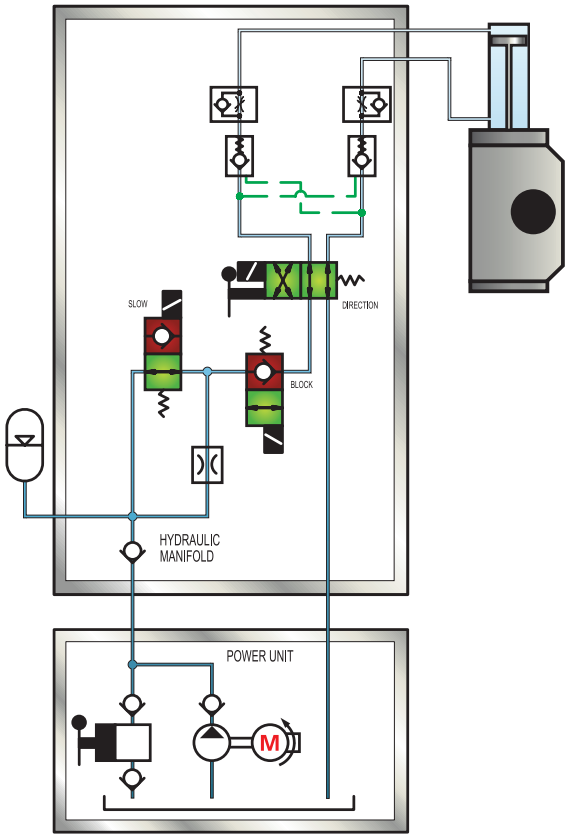

Spring-return

During the opening cycle, the motor turns on and drives the hydraulic pump. The bypass solenoid valve allows the pump to get up-to-speed under no load. When the motor is at full speed, the bypass valve shuts and hydraulic fluid is forced into the actuator cylinder moving the actuator to the open position. In an on/off application, to move the actuator to the close position, the close solenoid is opened allowing oil to flow to the reservoir at a high flow rate. For positioning applications, the close solenoid is opened until the actuator nears the position set point. At a configurable distance away from the set point, the close solenoid is shut and the slow solenoid is opened to provide an adjustable slow-speed mode for fine positioning. When moving in the close direction while in positioning mode, the bypass valve is opened allowing the motor to run continuously during frequent positioning. This reduces motor starts, increasing motor and contactor life. An accumulator will be fitted if hydraulic stroke speed adjustment is required by the application.

Double-acting

Double-acting EH actuators include a 4-way, 2-position solenoid valve to control the direction of travel. A stop solenoid is used to keep the actuator in position. A slow-speed solenoid is included for fine positioning near the set point. When energized, the hydraulic fluid is forced through the fixed orifice. An optional accumulator is used to provide stored energy for failsafe operation. Also for failsafe operation, the stop solenoid is changed to a normally open type. An accumulator will also be fitted if hydraulic stroke speed adjustment is required. The dual pilot operated check valves hold the actuator in position upon loss of pressure.

N.B. These schematics show the basic operation of EH spring-return and double-acting actuators. For simplicity, some items are not shown (i.e., relief valves, filtration, drain valves, and pressure sensing devices). EH actuators operates at high pressure, typically 100 to 170 bar (1,500 to 2,500 psi).

SB General Purpose Actuators

SB 301/302 – Two-Position

SB actuators offer the simplest solution to spring-return failsafe electric actuation for valve automation. Operating from a standard 230/110 VAC supply, they are designed for general purpose applications with ball and butterfly valves and fire damper. The actuators utilise a fully sealed electro-hydraulic power system with internal spring-return action for clockwise or anti-clockwise rotation.

Skilmatic model SB301/302 general purpose, two-position, quarter-turn actuators are designed for weatherproof applications to IP66/NEMA 4. The actuators provide a torque range of 24 to 480 Nm (212 to 4,248 lbf-in).

See publication F754 for further details.

SB 405/406 – Modulating

SB405/406 quarter-turn actuators are specifically designed for modulating control but are equally suited for 2-position applications. They accept a standard 4-20 mA or pulsed signal to position a valve or damper with a resolution better than 0.2° and offer a 100% duty rating.

The actuators are housed in a compact and robust weatherproof enclosure to IP65/NEMA 4 to suit all industries and remote valve locations with torque range from 24 to 510 Nm (212 to 4,513 lbf-in).

See publication F755 for further details.

SB-1 and SB-2 – Flameproof

SB-1Q and SB-2Q flameproof quarter-turn actuators are designed for two-position and emergency shutdown applications where failsafe spring-return action is required.

Suitable for hazardous areas certified ATEX II 2 G EEx dm IIB T4 (Tamb -35 to +60 °C, Tamb -31 to +140 °F).

The actuators are housed in a compact and robust watertight enclosure to IP67, suitable for a torque range from 65 to 4,400 Nm (575 to 39,000 lbf-in).

See publications F756 (SB-1) and F757 (SB-2) for further details.

Bus Control Systems

Rotork Pakscan – the total control solution

Whether you need remote control of just a small number of motorised valves or full automation of a plant with thousands of instruments and control elements, Pakscan can help you to achieve significant savings in terms of both time and money.

That's because Pakscan is capable of controlling and monitoring up to 240 field devices using a simple shielded, twisted pair cable loop instead of a multi-conductor cable for each field device. The system can also gather important digital and analogue plant data when its master station(s) is linked to the double-sealed field unit which is fully integral to each Rotork actuator.

Together with Pakscan's ability to communicate directly with a PLC or DCS system via an RS485 or RS232 link, its overall simplicity keeps customers' design work to a minimum.

See publication S000 for further details.

Fieldbus Compatibility

In addition to offering full compatibility with Pakscan, SI and EH actuators can be specified to interface seamlessly to many other fieldbus digital control systems. Open fieldbus protocols such as Profibus, Foundation Fieldbus, DeviceNet and Modbus are all available within the SI and EH actuator control options.

This is achieved simply and cost effectively through fitting an appropriate Rotork Fluid Systems manufactured circuit board module inside the actuator's electrical housing – normally at the time of production. Module commissioning and setup is carried out using a combination of the Rotork Setting Tool and the network commissioning tools used for the chosen protocol.

An internally mounted Pakscan field unit is used for remote control and status indication over a fault tolerant two-wire serial link. The system has loop distances of up to 20 km without repeaters and host communications using Modbus protocol. System variables are programmable over the infra-red data link.

Rotork Fluid Systems SI and EH Range actuators are fully compatible with the following fieldbus communication systems:

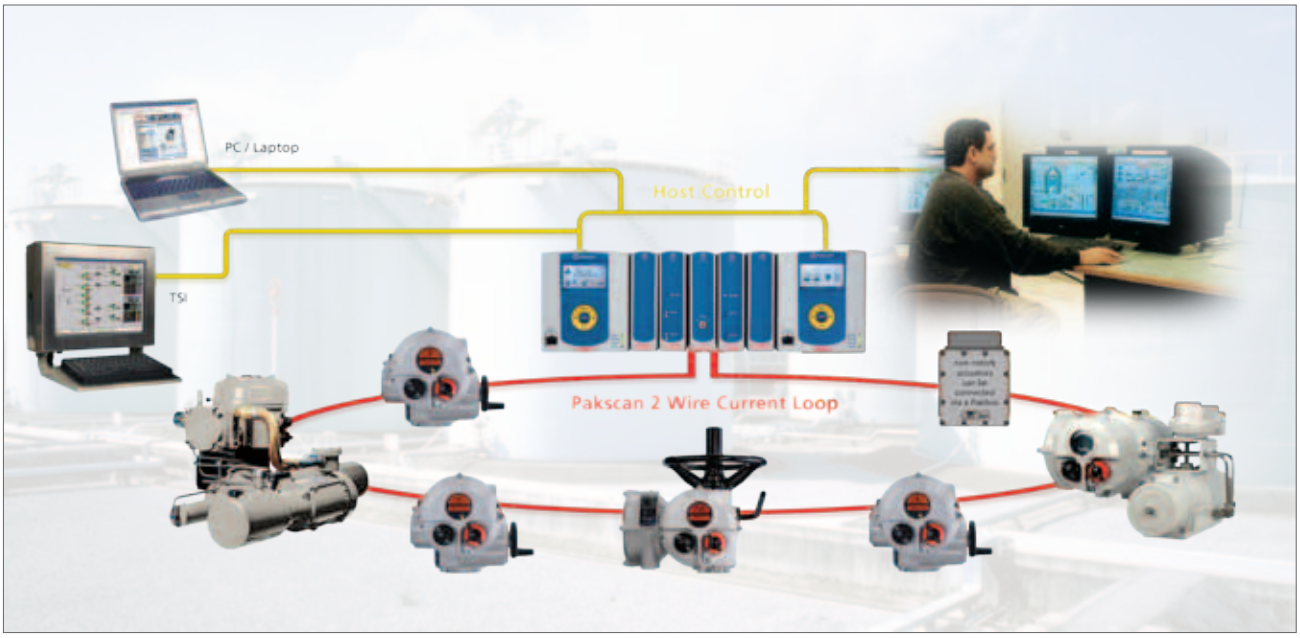

Industrial Applications

Applications

Applications for Skilmatic actuators cover a wide range of industries including oil & gas, power, water, chemical, mining, HVAC and various processing plants. They are ideally suited for remote locations, severe applications where compressed air is not a practical solution, safety critical loops and continuously modulating control. Below is a representative list of typical Skilmatic application.

- Wellhead ESD and choke valve control.
- Pipeline metering pressure control and remote ESD.
- Remote solar power applications.
- Inlet and outlet flow control for fuel storage.
- ESD for fuel storage terminals (ROSOV).
- Modulating control for gas distribution networks and booster stations.
- Tanker loading to optimise and control flow rates.
- Petroleum and hazardous substances road tanker loading ESD.
- Aviation fuel control, fuel line pressure control and ESD.
- Oil and gas refinery fire valves.
- Fire water system pressure control and failsafe distribution valves.
- Hydrocarbon vapour recovery systems.
- Methanol injection control.
- Flare stack ESD and pressure control.
- Modulating control for dosing and blending systems.
- Pump suction and discharge metering facilities.
- Ballast control for floating production vessels.
- Activated sludge aeration tank control WWTP.
- Methane recovery flow and temperature control.
- Filter overflow protection for potable water WTP.
- Water reservoir level control.
- Storm tank overflow protection.
- Feed water control for hydro-electric turbines.
- Tunnel and metro system fire dampers ESD (400 °C).
- Power plant steam and feed water control, damper control, shut-off systems.
- Gas turbine ESD valves.
- Glass manufacturing temperature control.
- Mining and quarry hydrosizer control.

Severe Temperatures

Standard SI actuators are suitable to operate in a temperature range of -20 to +60 °C (-4 to +140 °F) and EH between -20 to +40 °C (-4 to +104 °F). The product range can be supplied with various options of hydraulic fluid and seals to suit application with ambient temperatures to -50 °C (-58 °F).

High temperature, fire and explosive atmospheres are a major concern to refinery, gas processing, petro-chemical and offshore installations. Danger and damage from fire can be minimised by the efficient and effective protection of the actuators which control the process. Rotork can provide flexible, semi-rigid and rigid enclosure solutions up to 1,200 °C (2,192 °F) for up to 2 hours.

See publication S310 for further details.

Manual Overrides

Skilmatic actuators are available with optional manual overrides to allow operation of the valve or damper when power to the actuator is not available.

Quarter-turn actuators up to SI-2Q80 are available with manual override gearboxes that mount between the actuator and valve. The handwheel operated gearbox is housed in a cast-iron enclosure which can be supplied with an ISO drive shaft arrangement. Hydraulic manual hand pumps are available for all linear and large quarter-turn actuators.

Rotork Site Services

Rotork Site Services provides a comprehensive range of service products, each specifically tailored to meet customer requirements. *Emergency and Planned Service* encompasses installation, commissioning, upgrading, troubleshooting and repair of damaged or deteriorating assets. *Actuator Overhauls* are performed in Rotork workshops to bring long in service units back to guaranteed "as new" condition. *Health Checks* enable customers to prioritise maintenance and replacement planning and *Preventative Maintenance* enhances the integrity of actuators to maximise plant utilisation.

Rotork Site Services has a wealth of experience in retrofitting new actuators to valves, penstocks and dampers installed in an existing plant, as well as the factory assembly of new valves and actuators for plant upgrades and extensions. Capabilities for extended scope projects include surveys, design, procurement, manufacturing and commissioning to cover the broad scope of activities surrounding actuation projects.

SI and EH Actuators - General Specification

Materials

All SI / EH Actuators

SI / EH power unit:	Aluminium.
Piping:	Stainless steel (Hard piped).
External fasteners:	Stainless steel.
Paint finish:	Standard 2-pack epoxy silver grey or red (150 microns thick).

SI-1-Q31 to SI-1-Q80

Actuator body:	Aluminium.
Drive shaft:	Plated steel.
Switchbox:	Aluminium.

SI-2-Q100 to SI-2-Q130 & EH-Q

Actuator body:	Carbon steel or ductile iron.
Drive shaft:	Carbon steel.
Switchbox:	Aluminium.

SI-1-L, SI-2-L & EH-L

Actuator body:	Steel.
Piston rod:	Stainless steel.

Mechanical

Standard Operating Temperature

SI actuators:	-20 to +60 °C (-4 to +140 °F).
EH actuators:	-20 to +40 °C (-4 to +104 °F).

Optional Low Operating Temperature

SI-1:	-35 to +60 °C (-31 to +140 °F).
SI-2:	-40 to +60 °C (-40 to +140 °F).
EH:	-50 to +60 °C (-58 to +140 °F).

Watertight Rating

SI:	IP67 – IP68.
EH:	IP54 – IP68.

Torque / Thrust

See product specification sheets.

Linear Strokes

Standard up to 105 mm (4”). For optional strokes up to 3,000 mm, consult Rotork Fluid Systems.

Weight

See product specification sheets.

Failure Mode

SI:	Failsafe in direction of the spring or fail in last position.
EH:	Failsafe in direction of the spring / accumulator or fail in last position.

Failsafe Action

Quarter-turn:	Spring / accumulator to act clockwise or anti-clockwise.
Linear:	Spring / accumulator to extend or retract drive shaft.

Manual Override

SI-1-Q, SI-2-Q70/80:	Hydraulic hand pump or gearbox.
SI-2-Q110 to Q130:	Hydraulic hand pump.
SI-1-L & SI-2-L:	Hydraulic hand pump.
EH:	Hydraulic hand pump.

Pressure Measurement

An internal pressure transducer monitors the internal hydraulic system for valve seating and provide an alarm of potential stall conditions. Displayed as a % of maximum generated system pressure, or actual psi / bar.

Mounting

Vertical or horizontal, see product specification sheets.

Electrical

Mains Power Supply

Single-phase:	110,120, 230 VAC ±10%, 50/60 Hz
Three-phase (SI):	380 to 480 VAC ±10%, 50/60 Hz
Three-phase (EH):	190 to 690 VAC ±10%, 50/60 Hz
DC:	24 VDC

Power Consumption

See product specification sheets.

Digital Control (two-position)

Open, Close, Stop / Maintain, Partial stroke and ESD
20-60 VDC or 20-120 VAC, 5 mA minimum duration 300 ms.

Analogue Control (modulating)

4-20 mA or 0-10 VDC (adjustable deadband and hysteresis).

Optional Fieldbus Control

Compatible with Pakscan, Modbus, Profibus, Foundation Fieldbus and DeviceNet. See page 11.

Position Feedback

4-20 mA, internally or externally powered.

Resolution

SI:	<0.25% of full scale.
EH:	<0.5% of full scale.

Repeatability

SI:	<0.2% of full scale.
EH:	<0.5% of full scale.

Duty Rating

SI:	90%.
EH:	Consult Rotork Fluid Systems.

Alarm and Monitoring

Relay rating:	Volt free NC or NO contacts rated 5 mA to 5 A 120/230 VAC, 30 VDC.
Monitor relay:	Hardware, local controls, position sensor fault, and EEPROM error.
Alarm relay:	Over/under pressure, stalled, incorrect direction, loss signal, and unsuccessful partial stroke.

Cable Entries

SI:	Four M25/ M20 x 1.5P, adaptors can be fitted for other options.
EH:	Three ½" NPT, adaptors can be fitted for other options.

Position Measurement

Quarter-turn:	Potentiometer.
Linear:	Potentiometer or transducer.

Limit Switches

Two optional four electro mechanical SPDT volt-free switches. Rating 5 A maximum at 230 VAC.

Local Controls

Lockable Local / Stop / Remote selector switch and Open / Close switch. Totally sealed with internal reed switches.

Non-Intrusive Setting

Infrared setting via the Rotork Setting Tool.

Display

Liquid crystal display (LCD) for position, pressure and diagnostics, LEDs for limits and intermediate position.

Hazardous Area Certifications

Every Rotork Fluid Systems actuator is built to provide long and efficient service with a minimum of maintenance. The design, engineering and materials used in the construction ensure optimum performance even in the harshest of environments.

SI-1 Actuators

ATEX - II 2G EEx dme* IIB T4 (Ta: -35 to +60 °C)
ATEX - II 2G EEx dme* IIC T4 (Ta: -20 to +60 °C)
EN 60079-0: 2004, EN 60079-1: 2004, EN 60079-7: 2003, EN 60079-18: 2004, EN 13463-1: 2001.

IECEx - Ex dme* IIB T4 (Ta: -35 to +60 °C)
IEC 60079-0: 2000, IEC 60079-1: 2003, IEC 60079-7: 2001, IEC 60079-18: 2004.

FM - Class I, Zone 1 AEx dme* IIB T4 (Ta: -35 to +60 °C)
Class 3600: 1998, ANSI/ISA-12.00.01: 2002, ANSI/ISA-12.22.01: 2002, ANSI/ISA-12.16.01: 2002, ANSI/ISA-12.23.01: 2002, Class 3810: 2005, ANSI/NEMA-250: 1991.

CSA - Class I, Zone 1 Ex dme* IIB T4 (Ta: -35 to +60 °C)
CAN/CSA-E60079-0-02, CAN/CSA-E60079-1-02, CAN/CSA-E60079-7-03, CAN/CSA-E79-18-95 (R2004), CAN/CSA-C22.2 No. 61010-1-04.
(The approval applies only to the power unit. Full actuator assembly will need to be subjected to a CSA inspection).

GOST - Ex dme* IIB T4 (Ta: -35 to +60 °C)
EN 60079-0: 2004, EN 60079-1: 2004, EN 60079-7: 2003, EN 60079-18: 2004.

SI-2 Actuators

ATEX - II 2G EEx de* IIB T4 (Ta: -40 to +60 °C)
ATEX - II 2G EEx de* IIB T4 (Ta: -50 to +60 °C)
ATEX - II 2G EEx de* IIC T4 (Ta: -20 to +60 °C)
EN 60079-0: 2004, EN 60079-1: 2004, EN 60079-7: 2003, EN 13463-1: 2001.

IECEx - Ex de* IIB T4 (Ta: -40 to +60 °C)
IEC 60079-0: 2000, IEC 60079-1: 2003, IEC 60079-7: 2001.

FM - Class I, Zone 1 AEx de* IIB T4 (Ta: -40 to +60 °C)
Class 3600: 1998, ANSI/ISA-12.00.01: 2002, ANSI/ISA-12.22.01: 2002, ANSI/ISA-12.16.01: 2002, Class 3810: 2005, ANSI/NEMA-250: 1991.

CSA - Class I, Zone 1 Ex de* IIB T4 (Ta: -40 to +60 °C)
CAN/CSA-E60079-0-02, CAN/CSA-E60079-1-02, CAN/CSA-E60079-7-03, CAN/CSA-C22.2 No. 61010-1-04.
(The approval applies only to the power unit. Full actuator assembly will need to be subjected to a local CSA inspection).

GOST - Ex dme* IIB T4 (Ta: -40 to +60 °C)
EN 60079-0: 2004, EN 60079-1: 2004, EN 60079-7: 2003.

EH Actuators

ATEX - II 2GD EEx d IIB T4 (Ta: -50 to +60 °C)
EN 50014: 1997, EN 50018: 2000, EN 50019: 2000, EN 50281-1-1: 1999.

IECEx - Ex d IIB T4 (Ta: -50 to +60 °C)
IEC 60079-0: 2000, IEC 60079-1: 1998, IEC 60079-7: 2001.

FM - Explosionproof for Class I, Division 1, Group C, D, T3B (Ta: -50 to +60 °C) with UL certified motor.
FM - Dust-ignitionproof for Class II, Division 1, Group E, F, G, T3B (Ta: -50 to +60 °C) with UL certified motor.
Class 3600: 1998, Class 3615: 1989, Class 3810: 1989, (Includes Supplement 1): 1995, ANSI/NEMA-250: 1991.

CSA - (The full actuator assembly will need to be subjected to a local CSA inspection using a FM power unit).

GOST - Ex d IIB T4 (Ta: -40 to +60 °C)
EN 50014: 1997, EN 50018: 2000, EN 50019: 2000.

Setting Tool for SI and EH Actuators

ATEX - EEx ia IIC T4 (Ta: -30 to +50 °C).

FM - Intrinsically Safe for use in Class I, Division 1, Groups A, B, C & D T4 (Ta: -30 to +50 °C).

CSA - Ex ia, Class I, Division 1, Groups A, B, C, D (Ta: -30 to +50 °C).

SB-1 Actuators

ATEX - II 2G EEx dme IIB T4 (Ta: -35 to +60 °C)
EN 60079-0: 2004, EN 60079-1: 2004, EN 60079-7: 2003, EN 60079-18: 2004, EN 13463-1: 2001.

SB-2 Actuators

ATEX- II 2 G EEx de IIB T4 (Ta: - 40 to +60 °C)
EN 60079-0: 2004, EN 60079-1: 2004, EN 60079-7: 2003, EN 13463-1: 2001.

* 'e' increased safety available on single-phase & DC supply voltage only.

Certification temperatures are not operating temperatures. See specific operating temperature in product specification sheets.

See operating temperatures in general specifications.

rotork®
Fluid Systems

All Rotork Fluid Systems actuators are manufactured under a third party accredited ISO9001:2000 quality assurance programme.

Published and produced by Rotork Fluid Systems.

Rotork recognises all registered trademarks. As we are continually developing our products, their design is subject to change without notice.

POWTG0609

Latest product information and a full listing of our worldwide sales and service network are available on our website.

Controls
Electric Actuators and Control Systems

Fluid Systems
Fluid Power Actuators and Control Systems

Gears
Gearboxes and Gear Operators

Site Services
Projects, Services and Retrofit

www.rotork.com