ISSUE 9

Product Directory

VALVES TO KEEP LIFE FLOWING

- General Valves
- Balancing Valves
- Public Health Valves

BALL

BUTTERFLY

CHECK

TCV

BALANCING

PRESS FIT

WATER
HEATING
VENTILATION
AIR CONDITIONING
GAS

Hattersley®

UNITED KINGDOM

Ipswich (Headquarters)

11-15 Epsilon Terrace
West Road
Ipswich
IP3 9FJ
UK
Tel: +44 1473 277 400

Hitchin (Manufacturing)

46-48 Wilbury Way
Hitchin
Hertfordshire
SG4 0UD
UK
Tel: +44 1462 443 322

Northampton (Distribution Centre)

Lower Farm Road
Moulton Park Industrial
Estate - Northampton
NN3 6XF
UK
Tel: +44 1604 817 860

Cover photo: A4 Tower, Dubai

04122023

Technical Helpline UK: 0845 604 1790 MEA: +971 4 816 5800
Email UK: tech-enquiries@hattersley.com
MEA: mena-techenquiries@hattersley.com

Headquarters

Manufacturing

Distribution Centre

Sales Office

INTERNATIONAL

Dubai (Distribution Centre)

Jebel Ali Free Zone
South Zone 2
PO BOX 17415
Dubai
UAE
Tel: +971 880 9989

Dubai (Corporate Office)

Building 4, Office 901
The Galleries
PO BOX 17415
Downtown Jebel Ali
Dubai
UAE
Tel: +971 4 816 5800

Suzhou (Manufacturing)

Suzhou Ltd.
1 Runsheng Road
Shengpu Sip
Jiangsu Province
215126 Suzhou
China
Tel: +86 5126 28615 0088

Ningjin (Manufacturing)

8 Youyi Street
Ningjin
00863195856825
China
Hebei
Tel: +86 319 5802730

About Hattersley

The origins of Hattersley date to 1897, when 20 year-old Richard Hattersley started a small tool-making business in Halifax. In the early 1900s he relocated to Ormskirk, and in 1910 he joined with three other engineering companies, including Newman Hender & Co. of Woodchester, to form United Brassfounders & Engineers.

By 1937 Hattersley & Newman Hender both enjoyed worldwide sales, with Hattersley exporting to some 73 countries. During the second world war, both companies entered war production, making fuses for armaments, brass rods for munitions factories and, of course, special valves for military purposes.

In 2004, Crane Limited purchased the Hattersley valve brand and business from Hattersley Newman Hender Limited, a subsidiary of Tomkins plc.

Quality Assurance

Rigid quality control and inspection at all stages of manufacture ensure that Hattersley products are suitable for their intended application and will give reliable service. Every valve is individually tested in accordance with the relevant product standard.

Hattersley is an approved manufacturer under various quality schemes, including the British Standard Institution (BSI) Kitemark, and is ISO9001 accredited. In addition, the company has been approved and/or listed by third party organisations including the United Kingdom Water Regulations Advisory Scheme.

FUTURE VALVE TECHNOLOGY

Today, the Hattersley brand is synonymous with quality, reliability and service to the very highest standards, and has industry experience in many market sectors including heating and ventilation, chemicals, textiles, pharmaceuticals, waste treatment and power generation. Hattersley can supply a skilfully engineered solution for every application. Flagship products include a full range of commissioning valves suitable for constant and variable flow systems. Many of the Hattersley range of valves are readily available as BIM product components. Hattersley also offer a CPD programme certified by CIBSE and training days.

191222

Hattersley
Technical Helpline UK: 0845 604 1790 MEA: +971 4 816 5800
Email UK: tech-enquiries@hattersley.com
MEA: mena-techenquiries@hattersley.com

Contents

HATTERSLEY WORLDWIDE

Hattersley Worldwide	2-3

INTRODUCTION

About Hattersley	4
List of Symbols	8
Valve Selection Guide	9

BALANCING VALVES

Balancing – Static	11

GENERAL VALVES

Air Vents/De-Aerators	30
Ball Valves	34
Butterfly Valves	42
Butterfly Valves for Heating & Chilled Water Systems	56
Check Valves	64
Gate Valves	80
Gland Cocks/Drain Taps	98
Globe Valves	102
Press-Fit Valves	114
Strainers	122

PUBLIC HEALTH VALVES

Introduction	133
Strainers	134
Double Regulating Valves	136
Bronze - Swing Pattern	137
Pressure Reducing Valves	138
Thermal Circulation Valves	147
Thermostatic Mixing Valves	150

MISCELLANEOUS

World Cup Qatar 2022 Wall Chart	6
Flange Tables	154
Typical Kv Values	164
Quality Assurance	165
Sister Brands	171

HATTERSLEY PROJECTS

Hattersley Projects	166

FIGURE NUMBER INDEX

Figure Number Index	167

71223

Hattersley®

OUR QATAR WORLD CUP STARS

Al Janoub Stadium, Al-Wakrah

Al Bayt Stadium, Al Khor

Ahmad Bin Ali Stadium, Ar-Rayyan

Education City Stadium, Ar-Rayyan

Khalifa International Stadium, Doha

Stadium 974, Doha

These Hattersley valve types were specified and installed in the Qatar stadiums.

Balancing Valves

- WRAS Approved static balancing valves – DRV's & Fixed Orifice DRV's
- Available in medium and low flow versions
- Static balancing valves offer positive flow control at all hand wheel settings

Ball Valves

- Isolation valves with full flow in open position and bubble tight in closed
- Quarter turn to open & close
- Light, compact units
- Robust construction ensures long, trouble-free service life

Butterfly Valves

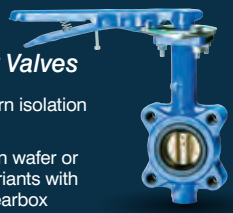

- Quarter turn isolation valves
- Supplied in wafer or lugged variants with lever or gearbox
- Linings are EPDM or nitrile rubber, depending on the intended service conditions

Check Valves

- Permit flow in one direction only
- Close automatically if flow reverses
- Entirely automatic depending on pressure & velocity of flow

Gate Valves

- Dependable where minimum pressure drop is important
- Efficient stop valves with flow in either direction
- Little resistance to flow

Strainers

- Eliminate scale and dirt in pipes
- Prevent damage to pipeline equipment
- Baskets are easily removed for cleaning

WRAS APPROVED PRODUCT

For more information on our full product range visit:
www.hattersley.com

FUTURE VALVE TECHNOLOGY

Hattersley®

Technical Helpline UK: 0845 604 1790 MEA: +971 4 816 5800
Email UK: tech-enquiries@hattersley.com
MEA: mena-techenquiries@hattersley.com

S Shand-Brown

Project: Great Sutton Street (Data Centre), London

Sector: Commercial

Distributor: Pipe Center Slough

Contractor: Gratte

Specification: General valves (Large bore up to 350mm in very large quantities), strainers (Figure 807 - 820), non-return valves (Figure M651), isolation valves (Figure 970G, 100 and 100EXT), standard commissioning valves (Figure MH733 - M2000).

List of Symbols

IV	Isolating valve	3PCV	Three-port control valve
DRV	Double regulating valve	4PCV	Four-port control valve
OP	Orifice plate	P T	Pressure/Temperature gauges
VODRV	Variable orifice double regulating valve	STR	Strainer
	Pump	NRV	Non-Return valve
FODRV	Fixed orifice double regulating valve	TP	Test point
	Constant flow regulator	DPCV	Differential pressure control valve
DOC	Drain off cock	PICV	Pressure independant control valve
TRV	Angled thermostatic valve	MAV	Manual air vent
2PCV	Two-port control valve		

Note: Product codes listed are the most popular, check valve sections for other choices.

141119

Hattersley®
Technical Helpline UK: 0845 604 1790 MEA: +971 4 816 5800
Email UK: tech-enquiries@hattersley.com
MEA: mena-techenquiries@hattersley.com

Valve Selection Guide

Application	Valve Type	Size Range	LTHW - Max 90°C	MTHW - Max 120°C	CHW	HTHW - Max 150°C
			Fig No.			
Check	Swing	15mm - 50mm	47	47	47	48
	Wafer / Swing	50mm - 300mm	861 / 666 / M651	861 / 666 / M651	861 / 666 / M651	M650-PN25 Swing
Double Check		15mm - 50mm				
		50mm - 300mm	260	260	260	
Drains	Plant/Rm		100HU	100HU	100HU	
	General		371	371	371	
Isolation	Ball / Gate	15mm - 50mm	100 / 30	100 / 30	100-EXT / 30	116 ball / 33 gate
	Butterfly	65mm - 300mm	950, 970 or 4970	950, 970 or 4970	950, 970 or 4970	4990-PN25 (2)
Press-Fit	DRV	15mm - 50mm	1432.PF	1432.PF	1432.PF	
	FODRV	15mm - 50mm	1732.PF	1732.PF	1732.PF	
	Ball	15mm - 50mm	100.PF	100.PF	100.PF	
	Check	15mm - 50mm	47.PF	47.PF	47.PF	
	Strainer	15mm - 50mm	817.PF	817.PF	817.PF	
Radiator Valves	Wheel		Angle Pattern	3150	Straight Pattern	3250
	Lockshield			3300LS		3400LS
Strainers		15mm - 50mm	817	817	817	807
		50mm - 300mm	822 / 811 / 922 / 911	822 / 811 / 922 / 911	822 / 811 / 922 / 911	
Thermostatic Radiator Valves	Standard		Angle Pattern	3180	Straight Pattern	3280
	Remote			3075/2RS		3275/RS

Application	Valve Type	Size Range	Mains Cold Water	Hot & Cold Water Services	Steam (Sat) to 10Bar	Condensate	Air	Gas (Isolation)
Check	Swing	15mm - 50mm	3047W	3047W	42	3047W		Main incoming gas to building 65mm - 300mm 971/971G (FL Butterfly)
	In-Line	65mm - 300mm	160W	160W		M651-PN16		
Drains	Plant/Rm			100HU			113	
	General			371				
Isolation	Gate	15mm - 50mm	30C	30C	13	30	113	
	Ball	15mm - 50mm						100YL
	Butterfly	65mm - 300mm	950W / 970W	950W / 970W			951 / 971	Main incoming gas to building 65mm - 300mm 971/971G (FL Butterfly)
Strainers		15mm - 50mm		817	807			
		65mm - 150mm		816W / 825W				

110121

Project: Leadenhall, London
Sector: Commercial
Distributor: BSS
Contractor: Crown House
Specification: General valves, commissioning valves, strainers, non-return valves.

S Shand-Brown

Hattersley®

Technical Helpline UK: 0845 604 1790 MEA: +971 4 816 5800
Email UK: tech-enquiries@hattersley.com
MEA: mena-techenquiries@hattersley.com

Balancing Valves - Static

Hattersley's range of static balancing valves includes Double Regulating Valves and Fixed Orifice Double Regulating Valves. The integral fixed orifice design offers greater accuracy than variable orifice design valves, makes set-up easier and involves fewer connections resulting in lower installation costs. Available in medium and low flow versions, Hattersley's static balancing valves offer positive flow control at all handwheel settings.

ONE VALVE SYSTEM (MEASUREMENT AND REGULATION AT ONE POINT)

Commissioning Set Components						
Service	**Commissioning Set (CS) Fig. No.**	**Metering Station (MS) Fig. No.**	**Double Regulating Valve (DRV) Fig. No.**	**End Connections**	**Size Range**	**Body Material**
Chilled Water LTHW, MTHW	1732	1000	1432	Screwed	1/2 - 2"	Bronze
	1732C	1000	1432C	Compression	15-54mm	Bronze
	1732L	1000L	1432L	Screwed	1/2"	Bronze
	1732LC	1000L	1432LC	Compression	15mm	Bronze
	1732M	1000M	1432	Screwed	1/2"	Bronze
	1732MC	1000M	1432C	Compression	15mm	Bronze
	-	-	MH733	Flanged	65-300mm	Ductile Iron
	-	M2000	-	Flanged	50-600mm	Stainless Steel
HTHW	-	M3000	1200DR	Flanged	15-50mm	Bronze

VARIABLE ORIFICE DOUBLE REGULATING VALVES

Service	VODRV Fig. No.	End Connections	Size Range	Body Material
Chilled Water LTHW, MTHW	MH737	Flanged	65-300mm	Ductile Iron

Preferred Arrangement

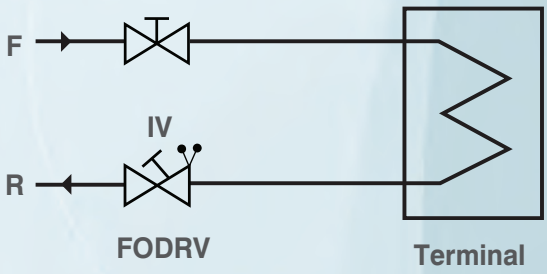

Fig. 1732

081116

Fig. 631
Standard Pressure Test Points (max 120°C)

WRAS APPROVED PRODUCT

TP

BS 7350
When fitted to measuring devices and strainers, test points are supplied with cap retainers in red and blue for upstream and downstream port identification. This meets the requirements of BS 7350.

Hattersley Figure 631 test points are WRAS Approved products and are listed in the water fittings and materials directory.

Test Probes
The application of a silicone lubricant to the probe shaft prior to insertion is recommended.

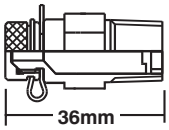

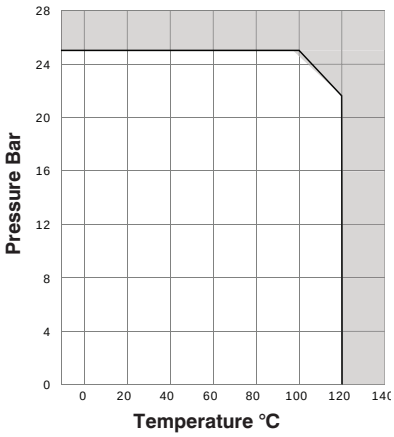

Rating
25 Bar to 100 Deg C
21.8 Bar at 120 Deg C
120 Deg C Max

Strategically placed test points allow access to live fluid systems for pressure and temperature measurements. Maximum temperature is 120°C (85°C when used with WRAS applications) and maximum pressure is 2500kPa. Suitable for Chilled Water, LTHW and MTHW.

The single piece DZR copper alloy body houses a uniquely designed elastomeric core, providing excellent sealing performance and wear resistance.

Double sealing on the cap is provided by precision metal to metal jointing backed up by a resilient O-Ring, allowing convenient, positive finger tightening.

For commissioning valve coefficients (Kv) please refer to relevant section in this brochure. (See Index)

Every effort has been made to ensure that the information contained in this publication is accurate at the time of publishing.
Hattersley Ltd assumes no responsibility or liability for typographical errors or omissions or for any misinterpretation of the information within the publication and reserves the right to change without notice.

301122

Hattersley®
Technical Helpline UK: 0845 604 1790 MEA: +971 4 816 5800
Email UK: tech-enquiries@hattersley.com
MEA: mena-techenquiries@hattersley.com

Fig. 1000
DZR Brass Metering Stations

WRAS APPROVED PRODUCT

OP

FEATURES & BENEFITS

- Precise and accurate measurement, conforming to BS 7350:1990
- Dezincification resistant material preventing corrosion cracking and fungal growth
- Flow Measurement Device is suitable for systems where pipes have been sized on the basis that pipe frictional losses lie in the range 100 to 400 Pa/m
- WRAS Approved for use with potable water up to 85°C
- Supplied with red and blue test points for upstream and downstream port identification
- Flow measurement accuracy of ±5%

MATERIAL SPECIFICATION

Component	Material	Specification BS EN
Metering Station	DZR Brass	12165 CW602N
Test Point	DZR Copper Alloy	12164 CW602N

DIMENSIONAL DRAWING

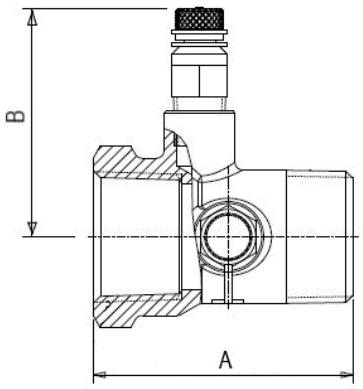

PRESSURE/ TEMPERATURE RATING

Threaded Ends
PN25 Series B
15 bar at 120ºC
25 bar from -10 to 120ºC

TEST PRESSURES

Shell: 30 bar

SPECIFICATION

Conforms to BS 7350:1990.
WRAS Approved Product up to 85°C.
Supplied fitted with two Figure 631 test points
Figure 1000 end connections threaded to BS EN 10266 (ISO 7-1) formerly BS 21.
Taper female with the exception of the 1/2" inlet which is parallel.

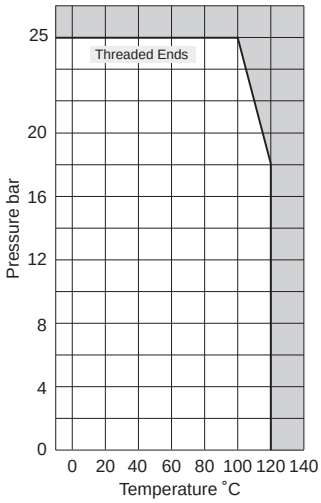

DIMENSIONS & WEIGHTS

Nom Size	mm in	15 1/2	20 3/4	25 1	32 1 1/4	40 1 1/2	50 2
A (Threaded)	mm	57.6	56.5	64	71	72	79.8
B	mm	52	55.5	58	63.5	66.5	72
Weight	kg	0.24	0.29	0.38	0.52	0.62	0.88

For commissioning valve coefficients (Kv) please refer to relevant section in this brochure. (See Index)

Every effort has been made to ensure that the information contained in this publication is accurate at the time of publishing. Hattersley Ltd assumes no responsibility or liability for typographical errors or omissions or for any misinterpretation of the information within the publication and reserves the right to change without notice.

010224

Fig. 1000L & 1000M
DZR Brass Low & Medium Flow Metering Stations

WRAS APPROVED PRODUCT

OP

FEATURES & BENEFITS

- Precise and accurate measurement, conforming to BS 7350:1990
- Dezincification resistant material preventing corrosion cracking and fungal growth
- WRAS Approved for use with potable water up to 85°C
- Supplied with red and blue test points for upstream and downstream port identification
- Flow measurement accuracy of ±5%

MATERIAL SPECIFICATION

Component	Material	Specification BS EN
Metering Station	DZR Brass	12165 CW602N
Test Point	DZR Copper Alloy	12164 CW602N

DIMENSIONAL DRAWING

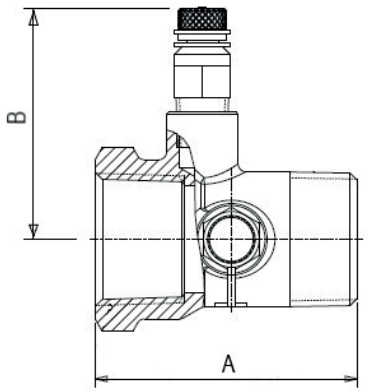

DIMENSIONS & WEIGHTS

Nom Size	mm in	15 1/2
A (Threaded)	mm	57.6
B	mm	52
Weight	kg	0.24

PRESSURE/ TEMPERATURE RATING

Threaded Ends
PN25 Series B
15 bar at 120ºC
25 bar from -10 to 120ºC

TEST PRESSURES

Shell: 30 bar

SPECIFICATION

Conforms to BS 7350:1990.
WRAS Approved Product to 85°C.
Supplied fitted with two Figure 631 test points.
Outlet connection taper threaded BS EN 10266 (ISO 7-1) formerly BS 21.
Inlet connection screwed BS 2779 (ISO 228) parallel.
Suitable for use with flow rates down to 0.01l/s.

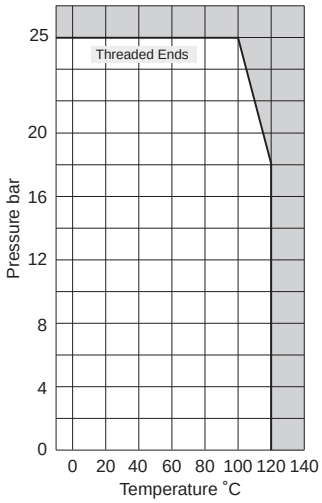

0102124

Hattersley®
Technical Helpline UK: 0845 604 1790 MEA: +971 4 816 5800
Email UK: tech-enquiries@hattersley.com
MEA: mena-techenquiries@hattersley.com

Fig. 1432, 1432L, 1432C, 1432LC Bronze Double Regulating Valve

WRAS APPROVED PRODUCT

DRV

FEATURES & BENEFITS

- Provides precise and accurate flow regulation
- Easy to operate with handwheel and numerical indicator
- Robust bronze body for long service life
- WRAS Approved for use with potable water to 85°C.
- Positive flow control at all handwheel settings

MATERIAL SPECIFICATION

Component	Material	Specification BS EN
Handwheel	Plastic	-
Stem	DZR copper alloy	12165 CW602N
Stem Seals	EPDM	-
Disc	DZR copper alloy	12165 CW602N
Disc Seal (1-2")	PTFE	-
Bonnet	DZR copper alloy	12165 CW602N
Body	Bronze	1982 CC491K

PRESSURE/ TEMPERATURE RATING

Threaded Ends
BS 7350 PN20
17.2 bar at 120ºC
20 bar at -10 to 100ºC

Compressions Ends
5 bar at 120ºC
6 bar at 110ºC
10 bar at 65ºC
16 bar from -10 to 30ºC
WRAS approval temperature -10 to 85ºC

TEST PRESSURES

Shell: 30 bar
Seat: 22 bar

SPECIFICATION

Sizes 1/2" to 1" Kitemarked to BS 7350:1990.
Handwheel operated.
Numerical indicator.
Inside screw non-rising handwheel.
Characterised regulating disc.
Flow charts available.
End connections threaded.
Sizes 1 to 2" taper threaded BS EN 10266 (ISO 7-1) formerly BS 21.
Sizes 1/2 & 3/4" to ISO 228 parallel.
Sizes DN15 & DN20 when used with compression. Adaptors suitable for copper pipe to BS EN 1057 R250 (half hard).
WRAS Approved Product.

APPLICATION

Figure 1432 can be used with Hattersley metering stations for commissioning.

DIMENSIONAL DRAWINGS

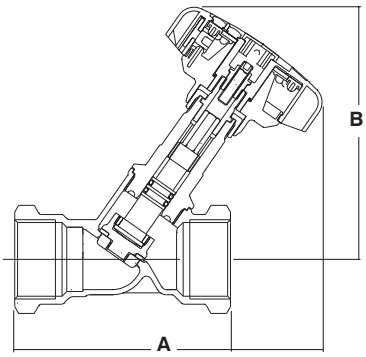

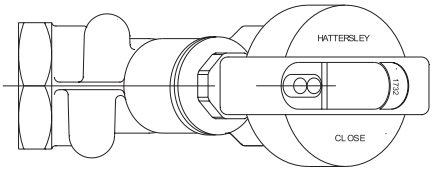

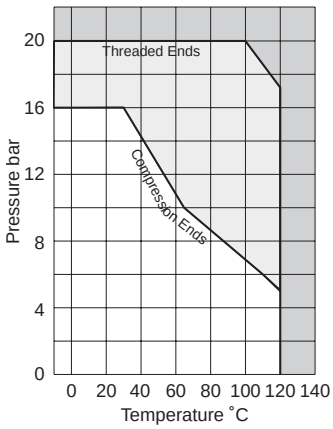

DIMENSIONS & WEIGHTS

Nom Size	in	1/2L	1/2	3/4	1	1 1/4	1 1/2	2
A	mm	87	87	96	100	114	125	146
A (Compression)	mm	105	105	118	-	-	-	-
B	mm	110	110	111	132	133	148	149
Weight	kg	0.54	0.54	0.58	0.88	1.05	1.43	1.88

For commissioning valve coefficients (Kv) please refer to relevant section in this brochure. (See Index)

Every effort has been made to ensure that the information contained in this publication is accurate at the time of publishing.
Hattersley Ltd assumes no responsibility or liability for typographical errors or omissions or for any misinterpretation of the information within the publication and reserves the right to change without notice.

240124

Fig. 1732, 1732M, 1732L, 1732C, 1732MC, 1732LC Bronze Fixed Orifice Double Regulating Valve (FODRV)

FOCS

WRAS APPROVED PRODUCT

FEATURES & BENEFITS

- Provides precise and accurate flow regulation
- Easy to operate with handwheel and numerical indicator
- Integral orifice and test points – no need for separate DRV and metering station
- WRAS Approved for use with potable water to 85°C.
- Positive flow control at all handwheel settings
- The FODRV offers an accuracy of ± 5% on all settings, for precise flow regulation and measurement

MATERIAL SPECIFICATION

Component	Material	Specification BS EN
Handwheel	Plastic	-
Stem	DZR copper alloy	12165 CW602N
Stem Seals	EPDM	-
Disc	DZR copper alloy	12165 CW602N
Disc Seal (1-2")	PTFE	-
Bonnet	DZR copper alloy	12165 CW602N
Body	Bronze	1982 CC491K
Orifice Insert	DZR copper alloy	12165 CW602N
Figure 631 Test Valve	DZR copper alloy	12165 CW602N

PRESSURE/ TEMPERATURE RATING

Threaded Ends
BS 7350 PN20
17.2 bar at 120ºC
20 bar at -10 to 100ºC

Compressions Ends
5 bar at 120ºC
6 bar at 110ºC
10 bar at 65ºC
16 bar from -10 to 30ºC
WRAS approval temperature -10 to 85ºC

TEST PRESSURES

Shell: 30 bar
Seat: 22 bar

SPECIFICATION

Conform to BS7350: 1990
Handwheel operated.
Numerical indicator.
Inside screw non-rising handwheel.
Characterised regulating disc.
Integral fixed orifice.
Supplied with two Figure 631 test points.
Flow charts available.
End connections threaded.
Sizes 1 to 2" taper threaded
BS EN 10266 (ISO 7-1) formerly BS 21.
Sizes 1/2 & 3/4" to ISO 228 parallel.
Sizes DN15 & DN20 when used with compression. Adaptors suitable for copper pipe to BS EN 1057 R250 (half hard).
WRAS Approved Product.

DIMENSIONAL DRAWINGS

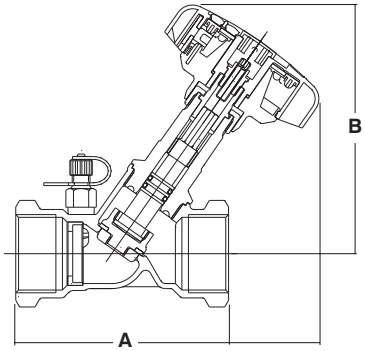

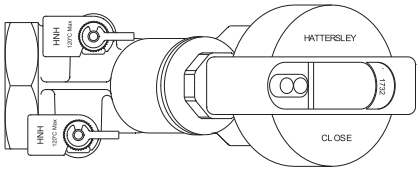

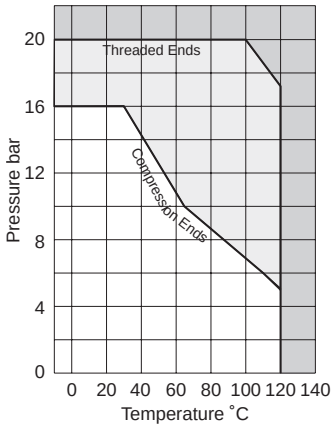

DIMENSIONS & WEIGHTS

Nom Size	in	1/2L	1/2M	1/2	3/4	1	1 1/4	1 1/2	2
A	mm	87	87	87	96	100	114	125	146
A (Compression)	mm	105	105	105	118	-	-	-	-
B	mm	110	110	110	111	132	133	148	149
Weight	kg	0.61	0.61	0.61	0.65	0.95	1.13	1.52	1.98

For commissioning valve coefficients (Kv) please refer to relevant section in this brochure. (See Index)

Every effort has been made to ensure that the information contained in this publication is accurate at the time of publishing.
Hattersley Ltd assumes no responsibility or liability for typographical errors or omissions or for any misinterpretation of the information within the publication and reserves the right to change without notice.

301122

Technical Helpline UK: 0845 604 1790 MEA: +971 4 816 5800
Email UK: tech-enquiries@hattersley.com
MEA: mena-techenquiries@hattersley.com

Fig. M2000
Stainless Steel Metering Stations

WRAS APPROVED PRODUCT

OP

FEATURES & BENEFITS

- Compact, wafer design for fitting in tight spaces
- Accurate flow measurement
- Supplied with red and blue test points for upstream and downstream port identification
- Accuracy of flow measurement at normal velocities is ±5%
- WRAS Approved for drinking water applications in sizes DN65 to DN150

MATERIAL SPECIFICATION

Component	Material	Specification	
		BS EN	ASTM
Orifice Plate	Stainless Steel	10088-1 X2 CrNiNo17-12-2	A276-316L
Extension Sleeve	Stainless Steel	10088-1 X2 CrNiNo17-12-2	A276-316L
Test Points	Figure 631	-	

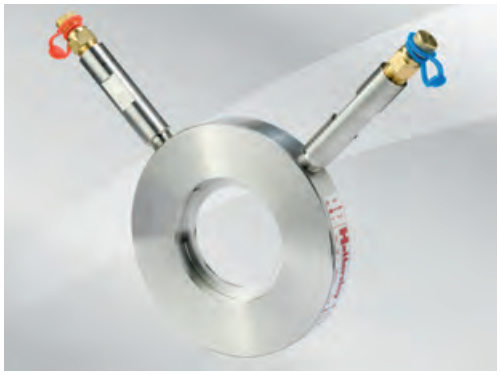

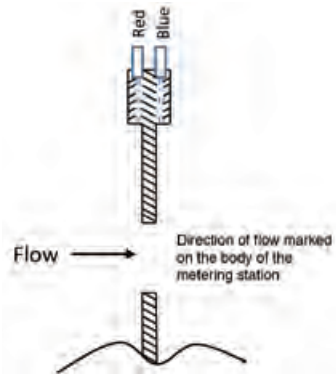

DIMENSIONAL DRAWINGS

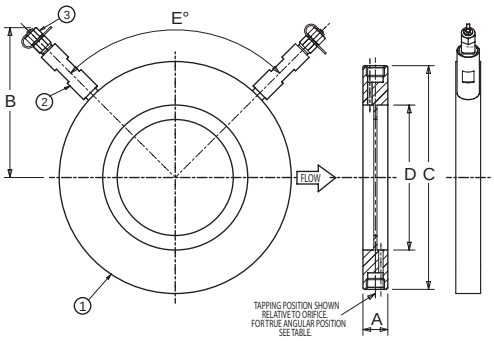

PRESSURE/ TEMPERATURE RATING

16 bar from -10 to 120ºC

Note: The Test Point Figure 631 has a maximum working temperature of 120ºC.

For higher temperature requirements contact Hattersley Sales Office.

TEST PRESSURE

Shell: 24 bar

All products classified in accordance with Pressure Equipment Directive 2014/68/EU, and Pressure Equipment (Safety) Regulations 2016, as amended.

DN50-300: Suitable for use on Group 2 Gas and Group 2 Liquids.

None suitable for use on Group 1 Liquids, Group 1 Gas, or unstable liquids.

SPECIFICATION

Kitemarked to BS 7350:1990.

Outside diameter locates metering station centrally on the relevant BS EN 1092-2 PN16 flange bolting.

Compatibility with other flanges available.

Supplied complete with extensions and Figure 631 test points – reference Fig. 631 data sheet for further detail.

Flow charts available.

Use with Figure MH733 to make Commissioning Set MH2733.

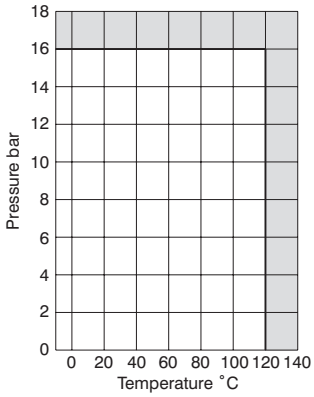

DIMENSIONS & WEIGHTS

Nom Size	mm	50	65	80	100	125	150	200	250	300
A	mm	18	18	18	18	18	18	18	18	18
B	mm	119	123.5	129	134	146	159	175	195	218
C	mm	109	129	144	164	194	220	275	331	386
D	mm	53.1	68.8	80.8	105.1	130.1	156.1	204.2	255	305.8
E	deg.	90	90	90	90	90	90	90	90	90
Weight	kg	1.3	1.6	1.9	2.1	2.7	3.1	4.3	5.6	7.0

For commissioning valve coefficients (Kv) please refer to relevant section in this brochure. (See Index)

Every effort has been made to ensure that the information contained in this publication is accurate at the time of publishing.
Hattersley Ltd assumes no responsibility or liability for typographical errors or omissions or for any misinterpretation of the information within the publication and reserves the right to change without notice.

121022

Fig. M2000
Stainless Steel Metering Stations

OP

FEATURES & BENEFITS

- Compact, wafer design for fitting in tight spaces
- Accurate flow measurement
- Supplied with red and blue test points for upstream and downstream port identification
- Accuracy of flow measurement at normal velocities is ±5%

MATERIAL SPECIFICATION

Component	Material	Specification	
		BS EN	ASTM
Orifice Plate	Stainless Steel	10088-1 X2 CrNiNo17-12-2	AISI 316
Extension Sleeve	Stainless Steel	10088-1 X2 CrNiNo17-12-2	AISI 316
Test Points	Figure 631	-	

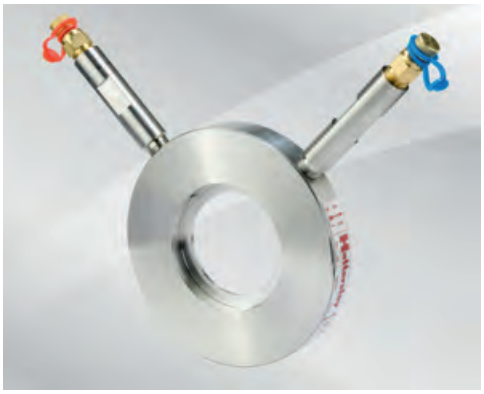

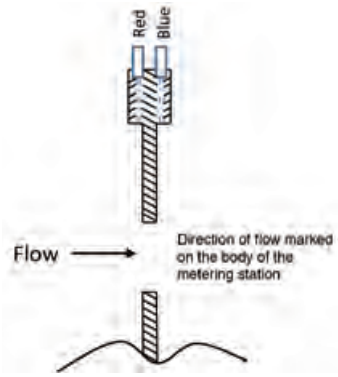

DIMENSIONAL DRAWINGS

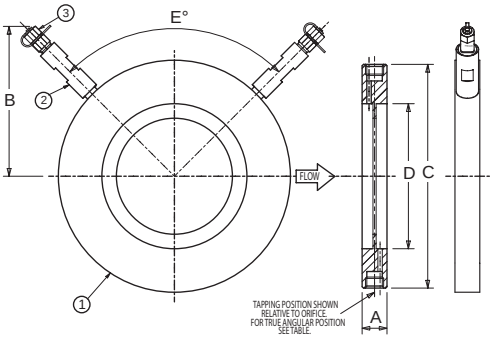

PRESSURE/ TEMPERATURE RATING

16 bar from -10 to 110°C

TEST PRESSURE

Shell: 24 bar

All products classified in accordance with Pressure Equipment Directive 2014/68/EU, and Pressure Equipment (Safety) Regulations 2016, as amended.

DN350-600: Suitable for use on Group 2 Liquids only, and limited to 110°C.

None suitable for use on Group 1 Liquids, Group 1 Gas, Group 2 Gas or unstable liquids.

SPECIFICATION

Outside diameter locates metering station centrally on BS EN 1092-2 PN16 flange bolting.

Adaptations to suit other flanges available.

Supplied complete with extensions and **Figure 631 test points – reference Fig. 631 data sheet for further detail**.

Flow charts available.

NOTE

When used with a butterfly valve a minimum of 5 diameters of straight length of same diameter pipe as the valve must be fitted on both sides of the metering station.

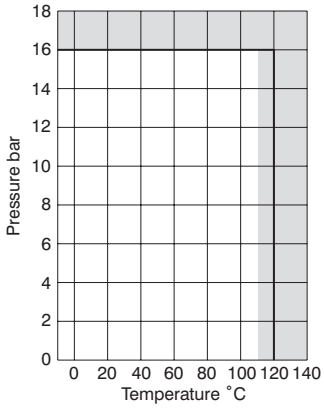

DIMENSIONS & WEIGHTS

Nom Size	mm	350	400	450	500	600
A	mm	21	21	21	23	23
B	mm	217	236	256	280	321
C	mm	446	498	585	620	737
D	mm	339.5	388.7	433	492	592.4
E	deg.	90	90	90	90	90
Weight	kg	12.7	14.8	18.3	24.7	33.5

Every effort has been made to ensure that the information contained in this publication is accurate at the time of publishing.
Hattersley Ltd assumes no responsibility or liability for typographical errors or omissions or for any misinterpretation of the information within the publication and reserves the right to change without notice.

121022

Technical Helpline UK: 0845 604 1790 MEA: +971 4 816 5800
Email UK: tech-enquiries@hattersley.com
MEA: mena-techenquiries@hattersley.com

Fig. M3000
Stainless Steel Metering Stations

OP

FEATURES & BENEFITS

- Compact, wafer design to fit between flanges
- Accurate flow measurement
- Supplied with red and blue test points for upstream and downstream port identification
- Accuracy of flow measurement at normal velocities is ±5%

MATERIAL SPECIFICATION

Component	Material	Specification BS EN	ASTM
Body	Stainless Steel	10088-1 X2CrNiMo 17-12-2	AISI 316
Extension Sleeve	Stainless Steel	-	
Valve Controlled Test Points	Figure 631	-	

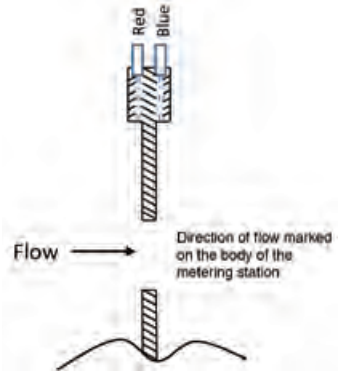

DIMENSIONAL DRAWINGS

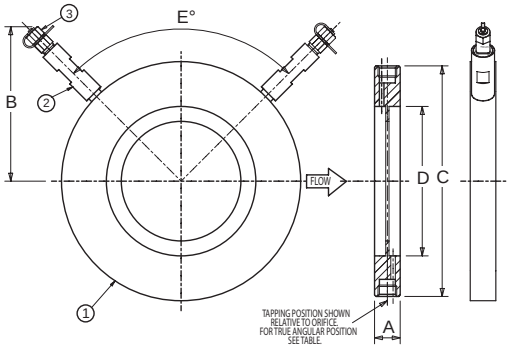

PRESSURE/ TEMPERATURE RATING

21.8 bar to 120ºC

25 bar from -10ºC to 100ºC

Note: The Valve Controlled Test Point Figure 631 has a maximum working temperature of 120ºC. If other test points are fitted the maximum operating temperature should be obtained from the test point manufacturer.

SPECIFICATION

Outside diameter locates metering station centrally on the relevant BS EN 1092-2 flange bolting.

Compatibility with other flanges available.

Supplied complete with extensions and **Figure 631 test points – reference Fig. 631 data sheet for further detail**.

Flow charts available.

Use with Figure MH733 to make Commissioning Set MH2733.

Rating
25 Bar to 100ºC
21.8 Bar at 120ºC
120ºC Max (DN300 limited to 110°C)

All products classified in accordance with Pressure Equipment Directive 2014/68/EU, and Pressure Equipment (Safety) Regulations 2016, as amended.

DN50-250: Suitable for use on Group 2 Gas and Group 2 Liquids.

DN300: Suitable for use on Group 2 Liquids only, and limited to 110°C.

None suitable for use on Group 1 Liquids, Group 1 Gas, or unstable liquids.

DIMENSIONS & WEIGHTS

Nom Size	mm	50	65	80	100	125	150	200	250	300
A	mm	20	20	20	20	20	20	20	20	20
B	mm	119	123.5	129	134	146	159	175	195	218
C	mm	109	129	144	164	194	220	275	331	386
D	mm	53.1	68.8	80.8	105.1	130.1	156.1	204.2	255	305.8
E	deg.	90	90	90	90	90	90	90	90	90
Weight	kg	1.4	1.5	1.8	2.2	2.6	3	4.4	5.7	7.1

Note: Weight shown above includes extensions, test points, gaskets and box.

For commissioning valve coefficients (Kv) please refer to relevant section in this brochure. (See Index)

Every effort has been made to ensure that the information contained in this publication is accurate at the time of publishing.
Hattersley Ltd assumes no responsibility or liability for typographical errors or omissions or for any misinterpretation of the information within the publication and reserves the right to change without notice.

121022

Fig. MH733 / MHA733
Double Regulating Valve (DRV)

DRV

FEATURES & BENEFITS

- The double regulating feature allows the valve to be used for isolation and to be re-opened to its pre-set position to maintain required flow rate

MATERIAL SPECIFICATION

Component	Material
Body	Ductile Iron - BS EN 1563 GJS-450-10
Bonnet	Ductile Iron - BS EN 1563 GJS-450-10
Bonnet gasket	Non-asbestos
Disc (All sizes)	EPDM Coated Cast Iron
Disc Bush	Bronze - BS EN 1982
Stem	Stainless Steel 410 - BS EN 10088-3 1.4006
Gland (65 to 150mm)	Brass - BS EN 12164:2016 CW614N
Gland (200 to 300mm)	Cast Iron - BS EN 1561 EN-GJL-250
Packing	Non-asbestos
Seat Ring	Bronze - BS EN 1982

DIMENSIONAL DRAWING

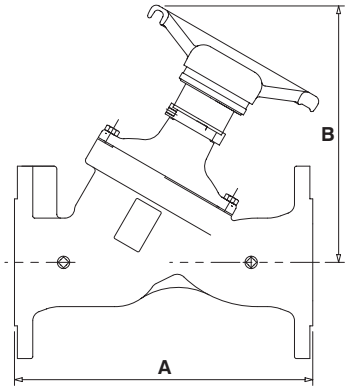

PRESSURE/ TEMPERATURE RATING

16 bar from -10 to 120ºC

Ratings align with BS EN 1092-2 PN16

SPECIFICATION

Y-Pattern globe valve with a characterised throttling disc and ends flanged to BS EN 1092-2 PN16.

The valve opening may be set to control flow at a pre-determined rate. Operation of the valve is by means of a hand wheel incorporating a position indicator.

An ANSI version is also available (MHA733).

APPLICATION

In two unit systems, the MH733 has sufficient authority to regulate flow in circuits incorporating a flow measurement device.

Fitted with 4 x 1/4" BSPT plugs which can be replaced with Figure 631 test points onsite to convert to Figure MH737.

Conforms to BS 7350.

Use with Figure M2000 to make Commissioning Set MH2733.

DIMENSIONS, WEIGHTS & COEFFICIENTS*

DN	A (mm)	B (mm)	Weight (kg)	Flow (Kv)	Headloss (K)
65	290	262	15.8	85	4.9
80	310	267	19.5	111	5.5
100	350	300	28.0	146	9.2
125	400	325	37.5	250	7.3
150	480	340	50.5	380	6.5
200	600	525	123.0	600	7.8
250	730	575	192.0	1211	4.6
300	850	645	251.0	1521	6.0

* Fully open position

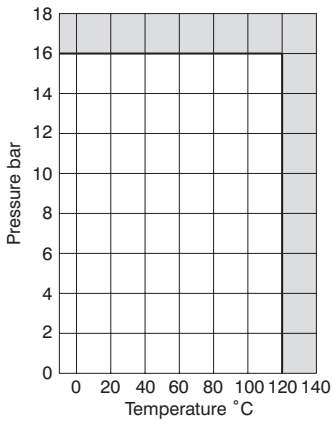

For commissioning valve coefficients (Kv) please refer to relevant section in this brochure. (See Index)

Every effort has been made to ensure that the information contained in this publication is accurate at the time of publishing.
Hattersley Ltd assumes no responsibility or liability for typographical errors or omissions or for any misinterpretation of the information within the publication and reserves the right to change without notice.

120918

Hattersley®
Technical Helpline UK: 0845 604 1790 MEA: +971 4 816 5800
Email UK: tech-enquiries@hattersley.com
MEA: mena-techenquiries@hattersley.com

MH737 / MHA737
Variable Orifice Double Regulating Valve (VODRV)

VOCS

FEATURES & BENEFITS

- The double regulating feature allows the valve to be used for isolation and to be re-opened to its pre-set position to maintain required flow rate

MATERIAL SPECIFICATION

Component	Material
Body	Ductile Iron - BS EN 1563 GJS-450-10
Bonnet	Ductile Iron - BS EN 1563 GJS-450-10
Bonnet gasket	Non-asbestos
Disc (All sizes)	EPDM Coated Cast Iron
Disc Bush	Bronze - BS EN 1982
Stem	Stainless Steel 410 - BS EN 10088-3 1.4006
Gland (65 to 150mm)	Brass - BS EN 12164:2016 CW614N
Gland (200 to 300mm)	Cast Iron - BS EN 1561 EN-GJL-250
Packing	Non-asbestos
Seat Ring	Bronze - BS EN 1982

DIMENSIONAL DRAWING

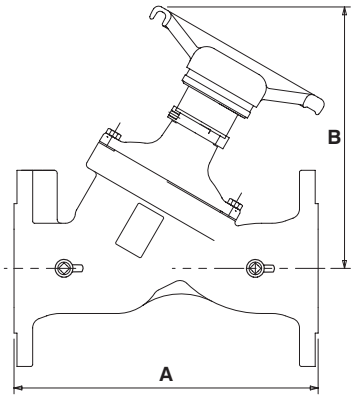

PRESSURE/ TEMPERATURE RATING

16 bar from -10 to 120ºC

Ratings align with BS EN 1092-2 PN16

SPECIFICATION

These are Y-Pattern globe valves suitable for flow regulation and isolation. Valves are supplied with **Figure 631 test points** to enable flow measurement. Valves conform to requirements of BS 7350 and ends are flanged to BS EN 1092-2 (formerly BS 4504).

An ANSI version is also available (MHA737).

APPLICATION

Primarily used in injection or other circuits requiring a double regulating valve for system balancing. Accuracy of flow measurement is ±10% at the full open position of the valve. Some reduction in accuracy occurs at partial openings of the valve in accordance with BS 7350.

DIMENSIONS, WEIGHTS & COEFFICIENTS*

DN	A (mm)	B (mm)	Weight (kg)	Flow (Kv)	Headloss (K)
65	290	262	15.8	85	4.9
80	310	267	19.5	111	5.5
100	350	300	28.0	146	9.2
125	400	325	37.5	250	7.3
150	480	340	50.5	380	6.5
200	600	525	123.0	600	7.8
250	730	575	192.0	1211	4.6
300	850	645	251.0	1521	6.0

* Fully open position

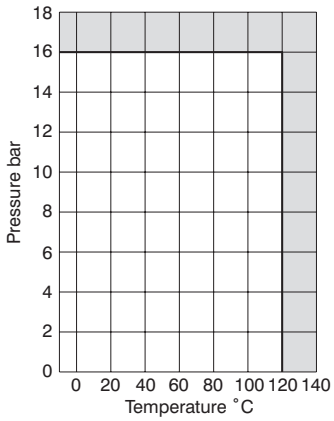

For commissioning valve coefficients (Kv) please refer to relevant section in this brochure. (See Index)

Every effort has been made to ensure that the information contained in this publication is accurate at the time of publishing. Hattersley Ltd assumes no responsibility or liability for typographical errors or omissions or for any misinterpretation of the information within the publication and reserves the right to change without notice.

120918

Fig.MH739 / MHA739
Fixed Integral Orifice Double Regulating Valve (FODRV)

FEATURES & BENEFITS

- Single unit Y-Pattern globe valves incorporating an integral orifice plate to form a fixed orifice flow measurement unit with regulation and isolation capacity
- The Double Regulating feature allows the valve to be used for isolation and to be reopened to its pre-set position to maintain required flow rate
- Accuracy of flow measurement is ±5% at all open positions of the valve in accordance with BS 7350: 1990
- Primarily used in injection or other circuits requiring a double regulating valve for system balancing
- External spray epoxy coated for improved durability

MATERIAL SPECIFICATION

Part	Material
Body	Ductile Iron - BS EN 1563 GJS-450-10
Bonnet	Ductile Iron - BS EN 1563 GJS-450-10
Bonnet Gasket	Non-asbestos
Disc	EPDM Coated Cast Iron
Disc Bush	Bronze - BS EN 1982
Stem	Stainless Steel 410 - BS EN 10088-3 1.4006
Gland (65 to 150mm)	Brass - BS EN 12164:2016 CW614N
Gland (200 to 300mm)	Cast Iron - BS EN 1561 EN-GJL-250
Packing	Non-asbestos
Seat Ring	Bronze - BS EN 1982

PRESSURE/ TEMPERATURE RATING

PN16 / -10 to 120°C
Ratings align with BS EN 1092-2 PN16 (formerly BS 4504)

SPECIFICATION

Y-Pattern globe valves suitable for flow regulation and isolation, supplied with Figure 631 test points to enable flow measurement. Valves conform to requirements of BS 7350 and ends are flanged to BS EN 1092-2 (formerly BS 4504).

END CONNECTIONS

MH739 Ends are flanged to BS EN 1092-2 PN16 (formerly BS 4504) and MHA739 Ends are flanged to ANSI B16.1 Class 125

DIMENSIONAL DRAWINGS

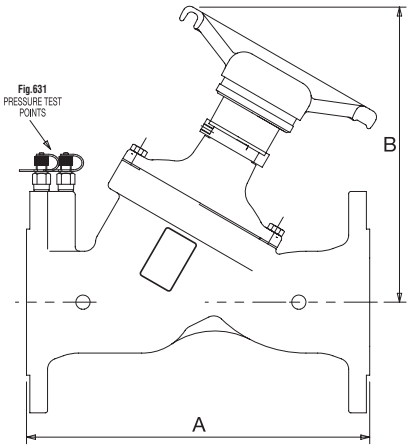

DIMENSIONS, WEIGHTS & COEFFICIENTS*

DN	Face To-Face A (mm)	Centre-To-Top B (mm)	Weight (kg)	Flow (Kv)	Headloss (K)	KVS
65	290	262	16.3	93	6.9	90
80	310	267	20.0	99	6.8	120
100	350	300	28.5	136	12.7	220
125	400	325	38.0	229	8.7	342
150	480	340	51.0	342	8.9	468
200	600	525	124.0	550	10.3	792
250	730	575	194.0	1052	6.0	1224
300	850	645	254.0	1367	7.8	1800

* Fully open position

Every effort has been made to ensure that the information contained in this publication is accurate at the time of publishing. Hattersley Ltd assumes no responsibility or liability for typographical errors or omissions or for any misinterpretation of the information within the publication and reserves the right to change without notice.

100918

Hattersley®

Technical Helpline UK: 0845 604 1790 MEA: +971 4 816 5800
Email UK: tech-enquiries@hattersley.com
MEA: mena-techenquiries@hattersley.com

Fig. 973 & 973G
Ductile Iron with Double Regulating Feature

DRV

FEATURES & BENEFITS

- Robust iron body materials for long service life
- Precise flow regulation
- Fully-lugged – easy to install and operate
- Positive flow control at all settings

MATERIAL SPECIFICATION

Component	Material	Specification	
		BS EN	ASTM
Body	Ductile Iron	1563 EN-JS 1040	A536 65-45-12
Shaft	Stainless Steel	10088-1 X17CrNi16-2	AISI 431
Disc	Aluminium Bronze	1982 CC333G	B148 C95800
Disc	Stainless Steel	10270 X10CrNr18-8	A276 304
Liner	EPDM	-	
Bearings	PTFE	-	

PRESSURE/ TEMPERATURE RATING

EPDM Seat
16 bar from -10 up to 120ºC

SERVICE RATING

Suitable for Chilled Water, LTHW and MTHW

TEST PRESSURES

Shell: 24 bar
Seat: 17.6 bar

SPECIFICATION

Generally conforms to BS EN 593: 2009.
Valves 250mm and above supplied gear box only.
Valves up to and including 200mm can be supplied lever or gear box operated.
All operators fitted with double regulating feature.

NOTE

Butterfly valves should not be less than 30° open when used for regulation duties.
Stainless Steel disc option 4973 - 4973G.

DIMENSIONAL DRAWINGS

Fig. 973

Nom Size	mm	50	65	80	100	125	150	200
A	mm	195	207	213	232	245	257	305
B	mm	83	95	102	124	136	150	197
C	mm	44	48	48	54	57	57	63
D	mm	32	32	32	32	32	32	44
E	mm	102	121	130	171	197	219	268
F	mm	260	260	260	260	260	260	356
G	mm	32	46	64	90	111	145	193
Weight	kg	4	4.5	7.2	12.6	13.5	14.9	24.1

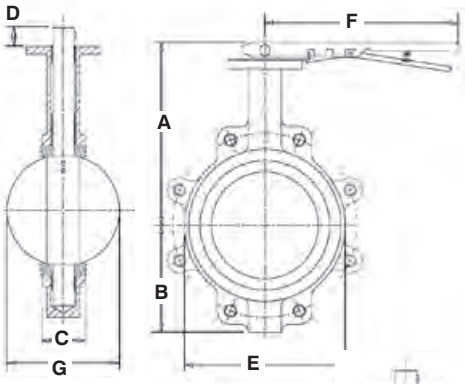

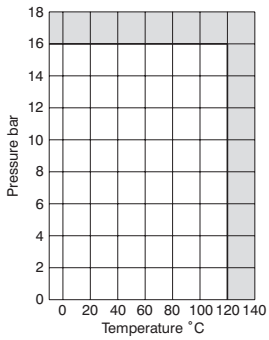

Fig. 973G

Nom Size	mm	50	65	80	100	125	150	200	250	300	350	400	450	500	600
A	mm	162	175	181	200	213	225	260	292	337	368	400	422	479	562
B	mm	83	95	102	124	136	150	197	210	248	279	305	381	381	457
C	mm	44	48	48	54	57	57	63	70	79	79	89	108	133	156
D	mm	42	42	42	42	42	42	40	40	40	40	-	-	-	-
E	mm	102	121	130	171	197	219	268	332	410	435	508	543	592	708
F	mm	150	150	150	150	300	300	300	300	300	300	450	450	450	450
G	mm	32	46	64	90	111	145	193	241	290	325	380	427	474	574
K	mm	240	240	240	240	240	240	230	230	230	230	277	277	321	335
Weight	kg	15.5	16	18.7	24.1	25	26.4	36.7	47.1	62.1	84.9	123.8	139.7	215.5	337.3

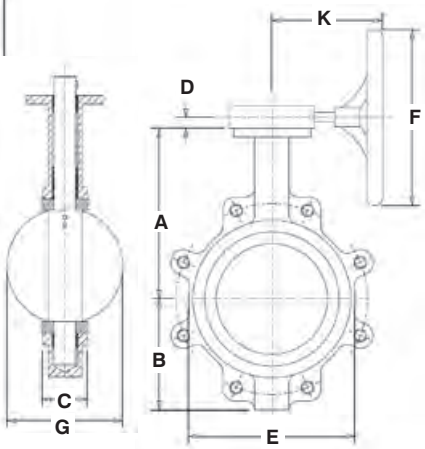

Every effort has been made to ensure that the information contained in this publication is accurate at the time of publishing.
Hattersley Ltd assumes no responsibility or liability for typographical errors or omissions or for any misinterpretation of the information within the publication and reserves the right to change without notice.

Technical Helpline UK: 0845 604 1790 MEA: +971 4 816 5800
Email UK: tech-enquiries@hattersley.com
MEA: mena-techenquiries@hattersley.com

Fig. 4923 & Fig. 4923G
Butterfly Double Regulating Valves

FEATURES & BENEFITS

- Robust, Ductile Iron valve bodies for long service life
- Stainless Steel discs as standard
- Suitable for wide temperature range -10°C to 120°C
- Fully lugged for secure installation
- Rated to PN25
- Lever and Gearbox operator options

MATERIAL SPECIFICATION

Component	Material	Specification BS EN
Body	DI (EN-GJS-400-15)	ASTM A536 65-45-12
Disc	Stainless Steel 304	ASTM A351 CF8
Shaft	Stainless Steel 431	ASTM A276 431
Short Bushing	Aluminum Bronze	ASTM B148-952A
Seat	EPDM	-
Long Bushing	Aluminum Bronze	ASTM B148-952A
Long Bushing	Aluminum Bronze	ASTM B148-952A
'O' Ring	NBR	-
Pin	Stainless Steel 431	ASTM A276 431
Top Cap (Fig.4923)	Carbon Steel	ASTM A194 Gr. 2H
Hand Wheel (Fig.4923G)	-	-
Bolt	Carbon Steel	ASTM A194 Gr. 2H
Lever (Fig.4923)	Malleable Iron	ASTM Gr. 32510
Gear Box (Fig.4923G)	Cast Iron	EN-GJL-250

DIMENSIONAL DRAWINGS

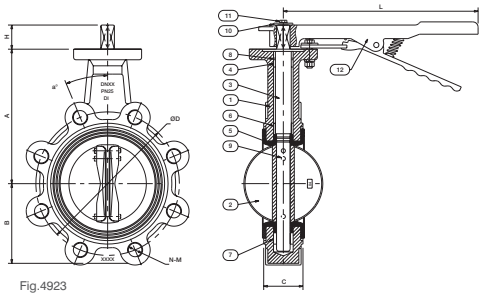

Fig.4923

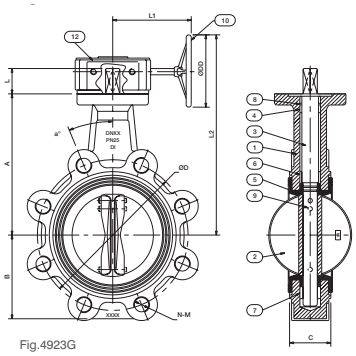

Fig.4923G

PRESSURE/ TEMPERATURE RATING

25 bar from -10°C to 120°C

SPECIFICATION

Medium: Group 2 Liquids

Flanges: Fully Lugged To BS EN 1092-2
Face To Face: BS EN 558

Design Standard: BS EN 593: 2009

Test And Inspection: Standard
BS EN12266-1

Mounting Flange ISO 5211-2001

DIMENSIONS & WEIGHTS

Fig.4923

Nom Size	mm	50	65	80	100	125	150
A	mm	138	153	155	178	193	210
B	mm	65	83	88	105.5	123	135
C	mm	43	46	46	52	56	56
ØD	mm	125	145	160	190	220	250
N-M	mm	4-M16	8-M16	8-M16	8-M20	8-M24	8-M24
H	mm	32	32	32	32	32	32
L	mm	216	216	216	265	265	265
a°		45°	22.5°	22.5°	22.5°	22.5°	22.5°
Kv		40	110	253	440	586	1213

Fig.4923G

Nom Size	mm	50	65	80	100	125	150	200	250	300
A	mm	138	153	155	178	193	210	240	285.4	315
B	mm	65	83	88	105.5	123	135	172	202	234.5
C	mm	43	46	46	52	56	56	60	68	78
ØD	mm	125	145	160	190	220	250	310	370	430
N-M	mm	4-M16	8-M16	8-M16	8-M20	8-M24	8-M24	12-M24	12-M27	16-M27
ØDD	mm	300	300	300	300	300	300	300	300	300
L1	mm	173.5	173.5	173.5	173.5	173.5	173.5	237	237	229.5
L2	mm	249	264	266	289	304	321	436	481.5	524
a°		45°	22.5°	22.5°	22.5°	22.5°	22.5°	15°	15°	11.25°
Kv		40	110	253	440	586	1213	2625	5294	9209

For commissioning valve coefficients (Kv) please refer to relevant section in this brochure. (See Index)

Every effort has been made to ensure that the information contained in this publication is accurate at the time of publishing.
Hattersley Ltd assumes no responsibility or liability for typographical errors or omissions or for any misinterpretation of the information within the publication and reserves the right to change without notice.

301122

Hattersley®
Technical Helpline UK: 0845 604 1790 MEA: +971 4 816 5800
Email UK: tech-enquiries@hattersley.com
MEA: mena-techenquiries@hattersley.com

Cast Iron and Steel Commissioning Valves Coefficients

Fig. M2000

Nom Size mm	50	65	80	100	125	150	200
Flow Kv	71.91	155.9	217.3	380.2	576.6	830.8	1412
Headloss Factor	0.45	0.4	0.4	0.35	0.35	0.35	0.35
Kvs	48.24	98.58	137.4	224.9	341.1	491.5	835.4

Nom Size mm	250	300	350	400	450	500	600
Flow Kv	2116	3073	3810	4968	6087	7958	11621
Headloss Factor	0.35	0.35	0.35	0.35	0.35	0.35	0.35
Kvs	1252	1818	2254	2939	3601	4708	6875

Fig. M3000

Nom Size mm	50	65	80	100	125	150	200	250	300
Flow Kv	-	155.9	217.3	380.2	576.6	830.8	1412	2116	3073
Headloss Factor	-	0.4	0.4	0.35	0.35	0.35	0.35	0.35	0.35
Kvs	-	98.58	137.4	224.9	341.1	491.5	835.4	1252	1818

Fig. MH733

Nom Size mm	50	65	80	100	125	150	200	250	300
Flow Kv (fully open)	-	85	111	146	250	380	600	1211	1521

Fig. MH737

Nom Size mm	50	65	80	100	125	150	200	250	300
Flow Kv (fully open)	-	85	111	146	250	380	600	1211	1521

Fig. 5953G

Nom Size mm	50	65	80	100	125	150	200	250	300
Headloss Factor	0.45	0.4	0.4	0.35	0.35	0.35	0.35	0.35	0.35
Kvs	48.24	98.58	137.4	224.9	341.1	491.5	835.4	1252	1818

Fig. 5973G

Nom Size mm	50	65	80	100	125	150	200	250	300
Headloss Factor	0.45	0.4	0.4	0.35	0.35	0.35	0.35	0.35	0.35
Kvs	48.24	98.58	137.4	224.9	341.1	491.5	835.4	1252	1818

Fig. 4983G PN25

Nom Size mm	50	65	80	100	125	150	200	250	300
Headloss Factor	1.86	0.95	0.50	0.29	0.37	0.43	0.31	0.56	0.33
Kvs	85	204	370	820	982	1353	2923	3374	6350

Every effort has been made to ensure that the information contained in this publication is accurate at the time of publishing.
Hattersley Ltd assumes no responsibility or liability for typographical errors or omissions or for any misinterpretation of the information within the publication and reserves the right to change without notice.

301122

Bronze Commissioning Valves Coefficients

Headloss Factor %

The headloss across a metering station is less than the differential pressure (¢P) signal indicated at the pressure tappings as shown on the metering station flow charts. The value of headloss for the metering station is shown as a percentage of the signal in the tables below.

The headloss of the DRV is obtained from the graph at the fully open position at the particular design flow rate. The total headloss of the metering station and DRV (commissioning set), when directly coupled or independently located, is the summation of the two separate values.

Fig.1000 / Fig.1000S

Nom Size mm	15	22	28	32	40	50
Flow Kv	2.244	5.4	9.63	21.68	34.38	71.1
Headloss Factor	0.75	0.6	0.6	0.5	0.45	0.45
Kvs	1.943	4.181	7.46	15.33	23.06	47.7

*Fig.1000S refers to DN15 only.

Fig. 1000C

Nom Size mm	15
Flow Kv	2.354
Headloss Factor	0.75
Kvs	2.039

Fig. 1000M / 1000SM

Nom Size mm	15
Flow Kv	1.101
Headloss Factor	0.83
Kvs	1.003

Fig. 1000L / 1000SLF

Nom Size mm	15
Flow Kv	0.533
Headloss Factor	0.9
Kvs	0.506

Fig. 1000MC

Nom Size mm	15
Flow Kv	1.129
Headloss Factor	0.83
Kvs	1.029

Fig. 1000LC

Nom Size mm	15
Flow Kv	0.539
Headloss Factor	0.9
Kvs	0.511

Fig. 1432, 1432L, 1432C, 1432LC

Nom Size in	1/2L	1/2	3/4	1	1 1/4	1 1/2	2
1432 Flow Kv (fully open)	2.26	2.14	3.6	6.37	12.3	21.3	31.3
1432L Flow Kv	-	2.26	-	-	-	-	-
1432C Flow Kv	-	2.14	3.6	-	-	-	-
1432LC Flow Kv	-	2.26	-	-	-	-	-

Fig. 2432, 2432LM, 2432LL

Nom Size in	1/2	3/4	1	1 1/4	1 1/2	2
2432 Flow Kv	1.549	2.995	5.31	10.7	18.11	28.65
2432LM Flow Kv	0.99	-	-	-	-	-
2432LL Flow Kv	0.519	-	-	-	-	-

Every effort has been made to ensure that the information contained in this publication is accurate at the time of publishing.
Hattersley Ltd assumes no responsibility or liability for typographical errors or omissions or for any misinterpretation of the information within the publication and reserves the right to change without notice.

270916

Technical Helpline UK: 0845 604 1790 MEA: +971 4 816 5800
Email UK: tech-enquiries@hattersley.com
MEA: mena-techenquiries@hattersley.com

Bronze Commissioning Valves Coefficients

Fig. 1732, 1732M, 1732L, 1732C, 1732MC, 1732LC

Nom Size in	1/2	3/4	1	1 1/4	1 1/2	2
1732 Flow Kv	1.87	3.14	5.59	10.8	18.1	29.1
1732 Kvs	1.943	4.181	7.46	15.33	23.06	47.7
1732M Flow Kv	1.06	-	-	-	-	-
1732M Kvs	1.003	-	-	-	-	-
1732L Flow Kv	0.57	-	-	-	-	-
1732L Kvs	0.506	-	-	-	-	-
1732C Flow Kv	1.87	3.14	-	-	-	-
1732C Kvs	2.037	4.457	-	-	-	-
1732MC Flow Kv	1.06	-	-	-	-	-
1732MC Kvs	1.029	-	-	-	-	-
1732LC Flow Kv	0.57	-	-	-	-	-
1732LC Kvs	0.511	-	-	-	-	-

Fig. 1200DR

Nom Size mm	15	20	25	35	40	50
Flow Kv	4.74	9.96	18.46	26.71	42.15	70.95

Every effort has been made to ensure that the information contained in this publication is accurate at the time of publishing.
Hattersley Ltd assumes no responsibility or liability for typographical errors or omissions or for any misinterpretation of the information within the publication and reserves the right to change without notice.

081116

Project: Blue Water Island, Dubai

Sector: Mixed-use development and leisure

Contractor: AE-ARMA

Specification: Hattersley supplied a full range of isolation, balancing, check, strainer and pressure reducing valves for the new retail shopping centre

As a reclaimed island offshore from Jumeirah Beach, this mixed-use development and leisure destination will be home to residential buildings, hotels, food outlets, retail, and the iconic 'Dubai-I', a Ferris wheel twice the size of the London Eye.

The Wharf Retail development has a gross floor area of 173,000 square metres, forming a 'souq' style retail area with complex facades that mix 50 different materials. Dubai's first inflated ETFE canopy will cover over 7,000 square metres.

Hattersley®

Technical Helpline UK: 0845 604 1790 MEA: +971 4 816 5800
Email UK: tech-enquiries@hattersley.com
MEA: mena-techenquiries@hattersley.com

Air Vents/De-Aerators

Offering an efficient performance, the Hattersley Air Vents remove inevitable and potentially dangerous air trapped in the system. Designed to simplify the venting process, for single or multi-boiler and calorifier installations, the range offers savings in time and costs.

Fig. No.	PN Rating	End Connections	Size Range	Cap Type	Shutoff Valve
775†	10	Threaded	3/8 - 1/2”	Standard	No
			3/4 - 1”	Hygroscopic	No
776†	10	Threaded	1/2”	Standard	Yes

† WRAS approved product

Fig. 775

Technical Helpline UK: 0845 604 1790 MEA: +971 4 816 5800
Email UK: tech-enquiries@hattersley.com
MEA: mena-techenquiries@hattersley.com

Fig. 775 & 776
Automatic Air Vent

WRAS APPROVED PRODUCT

FEATURES & BENEFITS

- Removes inevitable potentially dangerous air trapped in system
- Simplifies the venting process
- Saves time and costs
- WRAS approved for closed circuit use only
- A shut-off valve option is available in size 1/2 inch. Please specify when ordering Fig. 776
- Conforms to design standard BS EN 1074-4.

MATERIAL SPECIFICATION

Component	Material	Specification BS EN
Body 1"	Brass	EN12165 - CW617N
Body 3/8" to 3/4"	Brass	EN 1982 - CC754S
Cover	Brass	EN12165 - CW617N
Plug	Plastic	POLYAMIDE PA6 GF30%
Piston	Plastic	ACETAL
Seat	Brass	EN 12164 - CW614N
Gasket	Plastic	P.T.F.E.
Separating	Plastic	ACETAL
O-Ring	Rubber	EPDM PEROX
Spring	Stainless Steel	EN 10270-3 - 1.4310
Body isolation valve	Brass	EN 12164 - CW614N
O-Ring	Rubber	NBR
Lever	Plastic	ACETAL
Float	Plastic	POLYPROPYLENE
Seat Gasket	Rubber	NBR
Spring	Stainless Steel	AISI 302-EN 10270-3 NS
Hooking System	Plastic	ACETAL

DIMENSIONAL DRAWINGS

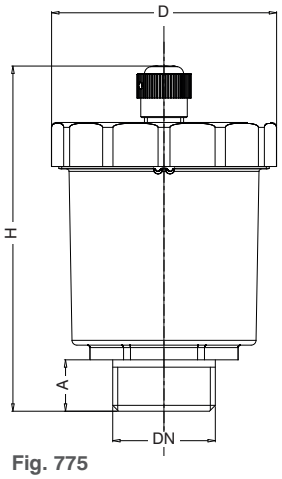

Fig. 775
3/8" - 1/2"

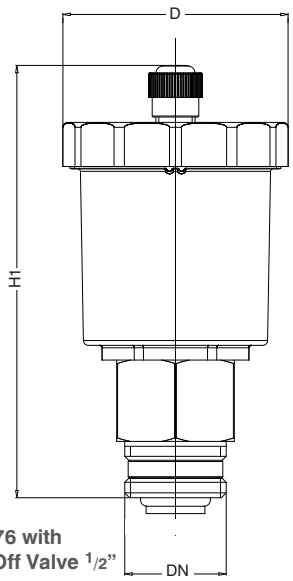

Fig. 776 with Shut-Off Valve 1/2"

PRESSURE/ TEMPERATURE RATING

Fig. 775 - 10 bar at 120°C
Fig. 776 - 10 bar at 110°C

Shut-Off Valve base

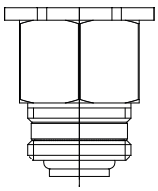

NOTE

Fig. 776 version with Shut-Off Valve base allows the Automatic Air Vent to be removed without draining the system

MAXIMUM DISCHARGE PRESSURE

7 bar

SPECIFICATION

Brass body and cover.
Polypropylene float.
EPDM seals.
WRAS approved for closed circuit use only.
BSP parallel thread.
Fig. 776 Shut-Off Valve option available in size 1/2".

*Graph refers to Fig. 775

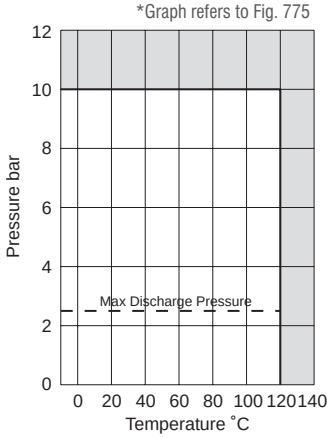

DIMENSIONS & WEIGHTS

Nom Size	in	Fig.775 3/8	Fig.775 1/2	Fig.775 3/4	Fig.775 1	Fig.776 1/2
D	mm	46	46	46	46	46
H/H1	mm	70.50	70.50	70.50	73.50	88
A	mm	10.50	10.50	10.50	13.50	10.50
Weight	kg	0.146	0.157	0.154	0.190	0.190

25/03/21

Every effort has been made to ensure that the information contained in this publication is accurate at the time of publishing. Hattersley Ltd assumes no responsibility or liability for typographical errors or omissions or for any misinterpretation of the information within the publication and reserves the right to change without notice.

Project: Al Arab Island Extension

Dubai's iconic Burj Al Arab have added another star to its already constellation-esque rating.

The Emirates most famous hotel's new island leisure concept, labelled 'North Deck', stretches 100 meters into the Gulf, offering 32 cabanas, 400 sun loungers, a restaurant, bar and large freshwater and saltwater pool – all in an area roughly rquivalent to a rugby pitch (10,000 sqm).

Location: Dubai

MEP Consultant: Clarke Samadhin Associates

MEP Contractor: Zener Stweard Electromechanical LLC

Specification: Hattersley supplied a range of PN25 valves for this 7-star hotel including isolation valves and check valves.

021219

Hattersley®

Technical Helpline UK: 0845 604 1790 MEA: +971 4 816 5800
Email UK: tech-enquiries@hattersley.com
MEA: mena-techenquiries@hattersley.com

Ball Valves

The Hattersley Series of ball valves consists of compact, lightweight units which are easy to install and operate, and their robust construction ensures a long, trouble-free service life. They offer full flow with minimum turbulence in the open position and bubble tight closure in the closed position. Only a quarter-turn is required to fully open or close the valve.

Fig. No.	PN Rating	End Connections	Size Range	Body Material	Operator	Special Application
100†	25	Threaded	1/4 - 2”	DZR Brass	Lever	None
100EXT†	25	Threaded	1/4 - 2”	DZR Brass	Lever + Extension	None
100TH†	25	Threaded	1/2 - 2”	DZR Brass	T-Handle	None
100LS†	25	Threaded	1/2 - 2”	DZR Brass	Lockshield	None
100HU	25	Threaded	G1/2 - G1”	DZR Brass	Lockshield	Male Hose Union
100YL	25*	Threaded	1/4 - 2”	DZR Brass	Lever	Gas
108C†	16	Compression	15 - 22mm	Chrome Plated DZR Brass	Lever***	None
113	40	Threaded	1/2 - 2”	Bronze	Lever	High Pressure Systems
116	25	Threaded	1/2 - 2”	Bronze	Lever	None
116EXT	25	Threaded	1/2 - 2”	Bronze	Lever + Extension	None

† WRAS approved product
* 25 Bar for non-gas applications. 5 Bar for gas applications
** 16 Bar for non-gas applications. 5 Bar for gas applications
*** Lever can be removed to allow for screwdriver operation

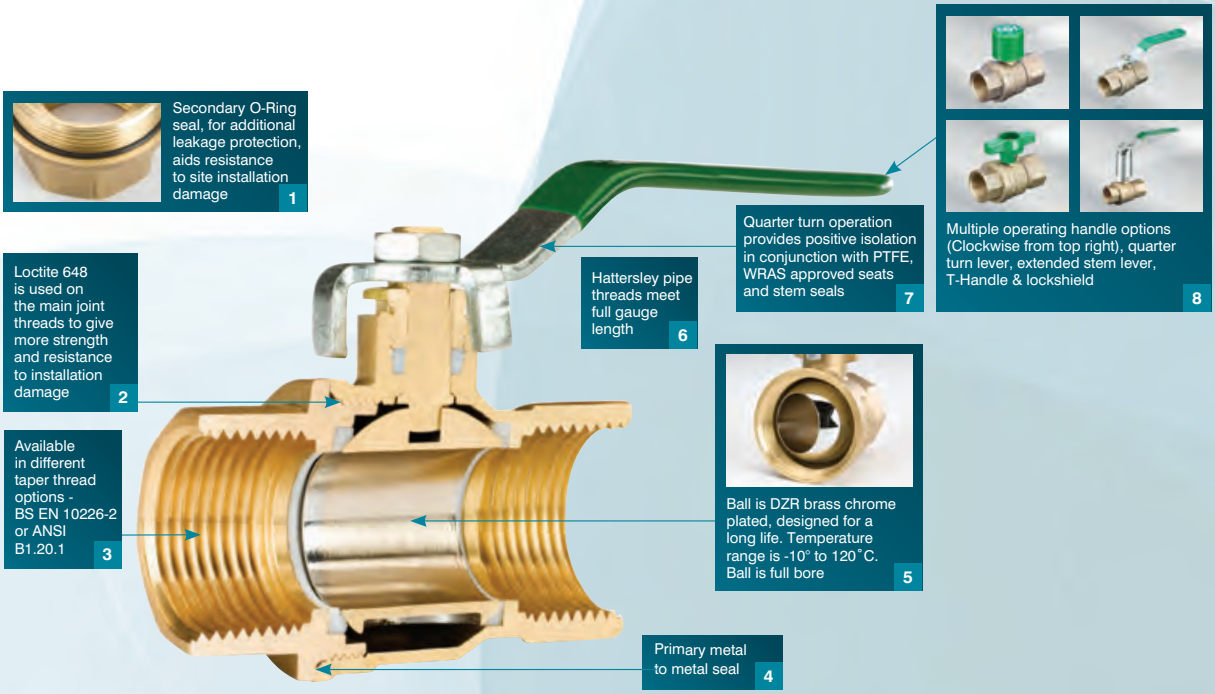

The New Figure 100 Series. See website for Next Generation DZR Ball Valves video.

010222

Hattersley®
Technical Helpline UK: 0845 604 1790 MEA: +971 4 816 5800
Email UK: tech-enquiries@hattersley.com
MEA: mena-techenquiries@hattersley.com

Fig. 100 & 100EXT
Threaded DZR - Lever Operated

WRAS APPROVED PRODUCT

IV

FEATURES & BENEFITS

- Dezincification resistant
- Light, compact and easy to install and operate
- Improved leak protection
- More resistant to damage during installation
- Sizes from 1/4" to 2"
- WRAS Approved for use on hot and cold water systems up to 85°C
- Conforms to BS EN 13547

Fig. 100

Fig. 100EXT

MATERIAL SPECIFICATION

Component	Material
Hex-Nut	Steel Plated
Lever	Steel Dacromet Plated
Sleeve	Green PVC
Packing Nut	Brass CW617N
Packing Gland	PTFE WRAS Approved
Body	DZR Brass CW602N
Seats	PTFE WRAS Approved
Ball (¼ – 1")	DZR Brass Chrome Plated BS EN 12165 CW602N
Ball (1¼ – 2")	Stainless Steel 304 BS EN 10088-3 1.4301 / AISI 304
O-Ring	Rubber EPDM WRAS Approved
Bonnet	DZR Brass CW602N
Stem	DZR Brass CW602N
Extension Stem Outer	Aluminium
Extension Stem Inner	Brass Nickel Plated

DIMENSIONAL DRAWING

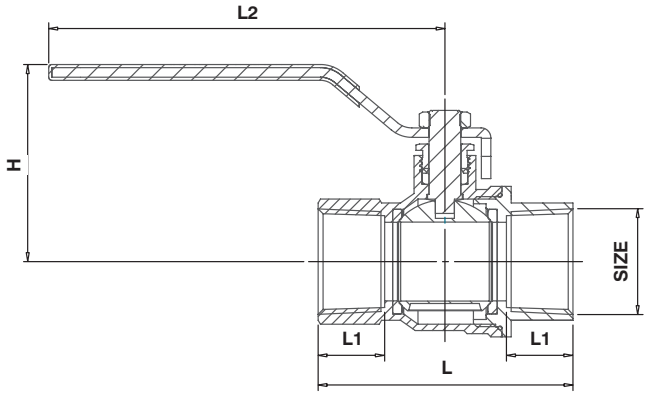

PRESSURE/TEMPERATURE RATINGS THREADED

Temperature °C	-10 to 100	120
Pressure bar	25	21.8

Intermediate pressure ratings shall be determined by interpolation.

SPECIFICATION

UK End Connection: BS EN 10226-2:2005 formerly BS21 Taper.

US End Connection: ANSI B1.20.1:1983.

Operator: Lever.

Specification: DZR Brass (CW602N) Body Ball Valve, in accordance to BS EN 13547, two-piece construction, Floating Chrome Plated DZR(CW602N) Ball, Anti Blow-out stem, PTFE seats, Threaded Ends, PN25 Rated. WRAS approved. Suitable for use on Group 2 Gas, Group 1 and Group 2 Liquids as defined by Pressure Equipment Directive 2014/68/EU, and Pressure Equipment (Safety) Regulations 2016, as amended.

* Not suitable for use on Group 1 Gases or unstable liquids.

DIMENSIONS & WEIGHTS

Nom Size	Fig.	in	1/4	3/8	1/2	3/4	1	1 1/4	1 1/2	2
L	100	mm	46	46	58.5	67	80.5	94	102	124
L1		mm	12	12	15.5	17	21	23	23	26.5
L2	100	mm	89	89	98.5	98.5	125	140	140	165
H	100	mm	41	41	48	51	62	77.5	83	95.5
H	100EXT	mm	-	-	103	107	116	129	135	150
Weight	100	g	152	136	205	302	511	890	1292	2238
Weight	100EXT	g	-	-	270	366	589	1009	1410	2283

240124

Every effort has been made to ensure that the information contained in this publication is accurate at the time of publishing. Hattersley Ltd assumes no responsibility or liability for typographical errors or omissions or for any misinterpretation of the information within the publication and reserves the right to change without notice.

Fig. 100TH & 100LS
Threaded DZR - T-Handle or Lockshield

WRAS APPROVED PRODUCT

IV

FEATURES & BENEFITS

- Dezincification resistant
- Light, compact and easy to install and operate
- Improved leak protection
- More resistant to damage during installation
- Sizes from 1/4" to 2" (T-Handle not available in sizes 1" & 1¼")
- WRAS Approved for use on hot and cold water systems up to 85°C
- Conforms to BS EN 13547

Fig. 100TH

Fig. 100LS

MATERIAL SPECIFICATION

Component	Material
Hex-Nut	Steel Plated
T-Handle	Aluminium AL-46100 Green
Packing Nut	Brass CW617N
Packing Gland	PTFE WRAS Approved
Body	DZR Brass CW602N
Seats	PTFE WRAS Approved
Ball	DZR Brass CW602N Chrome Plated
O-Ring	Rubber EPDM WRAS Approved
Bonnet	DZR Brass CW602N
Stem	DZR Brass CW602N
Lockshield	Brass CW617N
Lockshield Cover	Polypropylene Green

DIMENSIONAL DRAWING

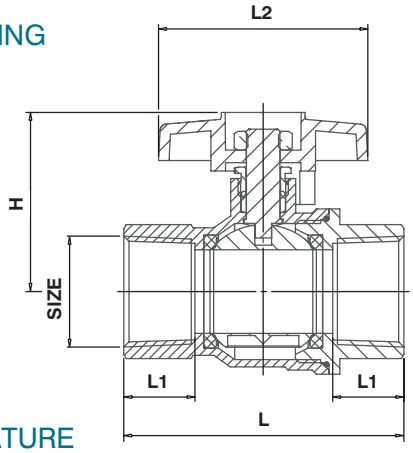

PRESSURE/TEMPERATURE RATINGS THREADED

Temperature °C	-10 to 100	120
Pressure bar	25	21.8

Intermediate pressure ratings shall be determined by interpolation.

SPECIFICATION

UK End Connection: BS EN 10226-2:2005 formerly BS21 Taper.

US End Connection: ANSI B1.20.1:1983.

Operator: T-Handle/Spanner/Socket.

Specification: DZR Brass (CW602N) Body Ball Valve, in accordance to BS EN 13547, two-piece construction, Floating Chrome Plated DZR(CW602N) Ball, Anti Blow-out stem, PTFE seats, Threaded Ends, PN25 Rated. WRAS approved. Suitable for use on Group 2 Gas, Group 1 and Group 2 Liquids as defined by Pressure Equipment Directive 2014/68/EU, and Pressure Equipment (Safety) Regulations 2016, as amended.
*Not suitable for use on Group 1 Gases or unstable liquids.

DIMENSIONS & WEIGHTS

Nom Size	Fig.	in	1/2	3/4	1	1 1/4	1 1/2	2
L		mm	59	67	80.5	94	102	124
L1		mm	15.5	17	21	23	23	26.5
L2	100TH	mm	50	50	55	82	82	110
H	100TH	mm	40	43	54	61	67	80.5
H	100LS	mm	42	45	58	67	73.5	86.5
Weight	100TH	g	183	277	470	809	1210	2106
Weight	100LS	g	207	302	506	867	1269	2166

(T-Handle not available in sizes 1" & 1¼")

Every effort has been made to ensure that the information contained in this publication is accurate at the time of publishing. Hattersley Ltd assumes no responsibility or liability for typographical errors or omissions or for any misinterpretation of the information within the publication and reserves the right to change without notice.

060923

Hattersley®

Technical Helpline UK: 0845 604 1790 MEA: +971 4 816 5800
Email UK: tech-enquiries@hattersley.com
MEA: mena-techenquiries@hattersley.com

Fig. 100HU
Male Hose Union

IV DOC

FEATURES & BENEFITS

- High quality range
- Long and trouble-free service life
- Full bore

MATERIAL SPECIFICATION

Component	Material
Shield Cover	Green PP (RAL6002)
Hex-Nut	Q235 Dacromet Plated
Lockshield	CW617N
Packing Nut	CW617N
Packing Gland	PTFE(701-N)
Body	CW602N
Ball	CW602N
PTFE	PTFE(701-N)
O-Ring	EPDM
Bonnet	CW602N
Washer	PTFE(701-N)
Tailpiece	CW602N
Union Ring	CW602N
Stem	CW602N

DIMENSIONAL DRAWING

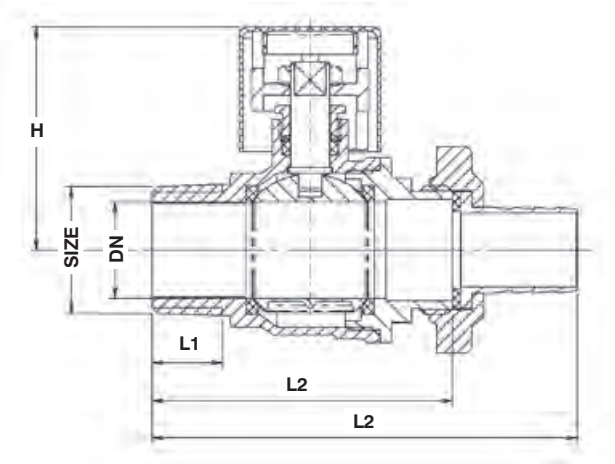

PRESSURE/ TEMPERATURE RATING

-10°C to 100°C

TEST PRESSURES

25 bar

SPECIFICATION

Quarter turn.
PTFE seats and stem seal.

DIMENSIONS & WEIGHTS

Nom Size	in	G 1/2	G 3/4	G 1
DN	mm	15	20	25
L	mm	84	98	109
L1	mm	14	15.5	18
L2	mm	58	66	77
H	mm	41.8	45.3	57.7

110121

Every effort has been made to ensure that the information contained in this publication is accurate at the time of publishing. Hattersley Ltd assumes no responsibility or liability for typographical errors or omissions or for any misinterpretation of the information within the publication and reserves the right to change without notice.

Fig. 100YL
Gas Threaded DZR - Lever Operated

IV

FEATURES & BENEFITS

- Dezincification resistant
- Light, compact and easy to install and operate
- More resistant to damage during installation
- Sizes from 1/4" to 2"
- Tested to BS EN 331:1998

MATERIAL SPECIFICATION

Component	Material
Hex-Nut	Dacromet Plated Steel
Handle Sleeve	PVC Yellow
Handle	Dacromet Plated Steel
Packing Nut	Brass CW617N
Packing Gland	PTFE
Body	DZR Brass CW602N
Ball	DZR Brass CW602N
Seats	PTFE
O-Ring	NBR BS EN549 approval
Bonnet	DZR Brass CW602N
Stem	DZR Brass CW602N

DIMENSIONAL DRAWING

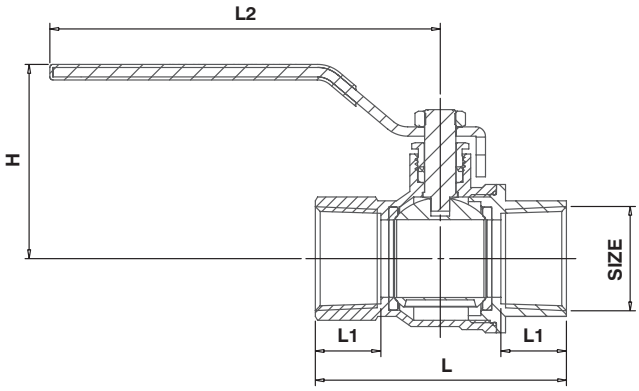

PRESSURE/TEMPERATURE RATINGS COMPRESSION

NON-GAS APPLICATION

Temperature °C	-10 to 100	110
Pressure bar	25	23.5

GAS APPLICATION

Temperature °C	-20 to 60
Pressure bar	5

Intermediate pressure ratings shall be determined by interpolation

SPECIFICATION

UK End Connection: BS EN 10226-2:2005 formerly BS21 Taper.

US End Connection ANSI B1.20.1:1983.

Operator: Lever.

Specification: Quarter turn.

PTFE seats and stem seal.

Tested by GL Industrial Services and complies with the essential requirements of BS EN 331:1998.

DIMENSIONS & WEIGHTS

Nom Size	in	1/4	3/8	1/2	3/4	1	1 1/4	1 1/2	2
L	mm	46	46	59	67	80.5	94	102	124
L1	in	12	12	15.5	17	21	23	23	26.5
L2	in	89	89	98.5	98.5	125	140	140	165
H	mm	41	41	48	51	63	78	83.5	97.5
Weight	g	152	136	205	302	511	890	1292	2238

Every effort has been made to ensure that the information contained in this publication is accurate at the time of publishing. Hattersley Ltd assumes no responsibility or liability for typographical errors or omissions or for any misinterpretation of the information within the publication and reserves the right to change without notice.

110121

Hattersley®

Technical Helpline UK: 0845 604 1790 MEA: +971 4 816 5800
Email UK: tech-enquiries@hattersley.com
MEA: mena-techenquiries@hattersley.com

Fig. 113
Threaded Bronze - Lever Operated

IV

FEATURES & BENEFITS

- 40 bar rating to suit demanding system pressures.
- Robust design for a long and trouble free service life
- Light and compact for easy installation
- 90° lever operation for simple use
- Full bore design to facilitate optimal flow rates with minimum turbulence

MATERIAL SPECIFICATION

Component	Material	Specification
Lever	Mild Steel	Zinc Plated
Lever Cover	P.V.C	-
Stem	DZR Brass	BS EN 12164 CW602N
Packing	PTFE	-
Ball	DZR Brass (Chrome Plated)	BS EN 12164 CW602N
Seat	PTFE	-
Seat Retainer	Bronze	BS EN 1982 CC491K
Body	Bronze	BS EN 1982 CC491K

PRESSURE/ TEMPERATURE RATING

40 bar from -10 to 100°C
18 bar at 140°C

SPECIFICATION

Operator: Lever
Quarter turn
Anti blow out stem
Full bore chrome plated ball.
PTFE seats and stem seals.
UK End Connection: BS EN 10226-2 Taper Thread
US End Connection: ANSI B1.20.1 Taper Thread

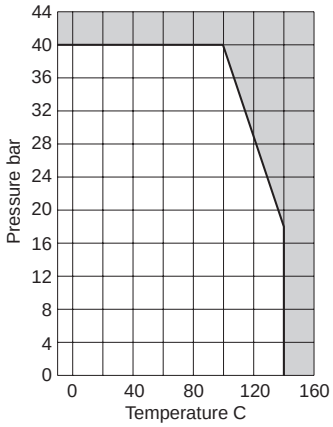

DIMENSIONAL DRAWING

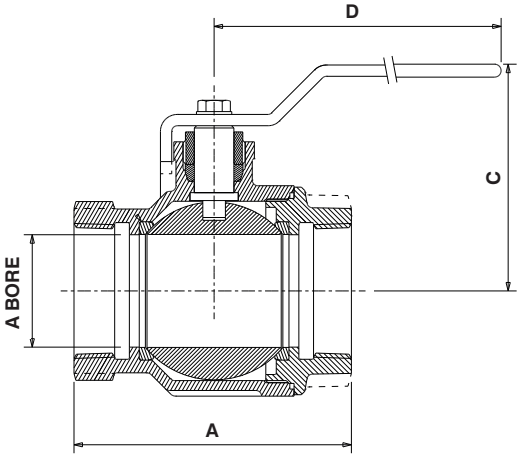

DIMENSIONS & WEIGHTS

Nom Size	in	1/2	3/4	1	1 1/4	1 1/2	2
A	mm	57	67	77	91	103	122
B	mm	15	20	25	32	40	50
C	mm	54	58	66	72	82	90
D	mm	92	92	127	127	142	142
Kv Values		31	45	63	102	375	420
Weight	kg	0.22	0.45	0.69	1.12	1.67	2.93

110121

Every effort has been made to ensure that the information contained in this publication is accurate at the time of publishing. Hattersley Ltd assumes no responsibility or liability for typographical errors or omissions or for any misinterpretation of the information within the publication and reserves the right to change without notice.

Fig.116 & Fig.116EXT
Threaded Bronze - Lever Operated

FEATURES & BENEFITS

- Robust design for a long and trouble free service life
- Light and compact for easy installation
- 90° lever operation for simple use
- Full bore design to facilitate optimal flow rates with minimum turbulence

Fig. 116

MATERIAL SPECIFICATION

Component	Material	Specification
Body	Bronze	BS EN 1982 CC491K
Seat Retainer	Bronze	BS EN 1982 CC491K
Ball (1/2" - 1")	DZR Brass (Chrome Plated)	BS EN 12165 CW602N
Ball (1 1/4" - 2")	Bronze (Chrome Plated)	BS EN 1982 CC491K
Seat Ring	PTFE	-
Stem	DZR Brass	BS EN 12164 CW602N
Packing	PTFE	-
Gland Nut	DZR Brass	BS EN 12164 CW602N
Lever	Mild Steel (Zinc Plated)	-
Lever Cover	PVC	-
Screw	Mild Steel (Zinc Plated)	-
Extension Housing	Aluminium	-
Extension	Stem Brass	BS EN 12164 CW602N

PRESSURE/ TEMPERATURE RATING

25 bar from -10 to 100°C
10.5 bar at 186°C

SPECIFICATION

Anti blow out stem
Operator: Lever
Quarter turn
Full bore, chrome plated ball
Tight shut-off
PTFE seats and stem seals
UK END CONNECTION:
BS EN 10226-2 Taper Thread
US END CONNECTION:
ANSI B1.20.1 Taper Thread

DIMENSIONAL DRAWING

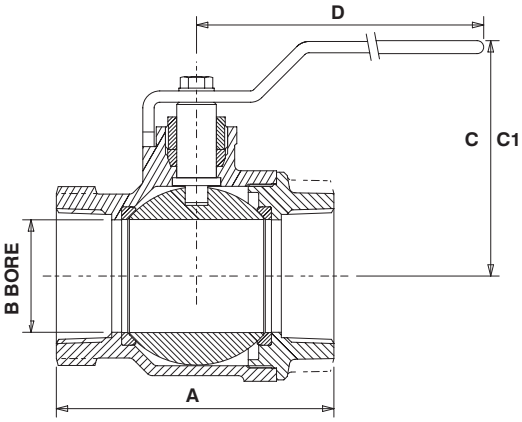

DIMENSIONS & WEIGHTS

Nom Size	in	1/2	3/4	1	1 1/4	1 1/2	2
A	mm	57	67	77	91	103	122
B	mm	15	20	25	32	40	50
C	mm	54	58	66	72	82	90
C1 (Fig. 116EXT)	mm	104	108	128	134	151	159
D	mm	92	92	127	127	142	142
Kv		31	45	63	102	375	420
Fig.116 Weight	kg	0.24	0.40	0.60	0.86	1.37	2.23
Fig.116EXT Weight	kg	0.30	0.47	0.69	1.00	1.55	2.30

Every effort has been made to ensure that the information contained in this publication is accurate at the time of publishing. Hattersley Ltd assumes no responsibility or liability for typographical errors or omissions or for any misinterpretation of the information within the publication and reserves the right to change without notice.

030221

Hattersley®
Technical Helpline UK: 0845 604 1790 MEA: +971 4 816 5800
Email UK: tech-enquiries@hattersley.com
MEA: mena-techenquiries@hattersley.com

Project: The Poultry Hotel

Sector: Hotel

Location: London

Contractor: Riverside Engineering

Distribution: T G Lynes

Specification: The Poultry Hotel has been refurbished to provide a 252 bedroom hotel, restaurant with ancillary uses including a bar, health and leisure facilities and event spaces, roof top terraces with a bar/restaurant and swimming pool and associated landscaping, highway works and plant. Hattersley domestic services, gas, CHW, HTG, including Hook-Up units have been installed throughout the refurbishment.

021219

Butterfly Valves

Hattersley butterfly valves are compact quarter turn valves. The body is elastomer lined providing a resilient bubble tight shut off. The valves are supplied in wafer or lugged variants and may be lever or gearbox operated. Linings are EPDM or Nitrile rubber depending on the intended service conditions. Primarily recommended for on off service, they may also be used for non-critical throttling applications. Only a quarter turn is needed to fully open or close the valve.

Fig. 970

Hattersley also offer a range of high performance butterfly valves, developed for high integrity shut-off and regulation duties. This range is ideal where increased pressure and elevated temperature specifications are outside the normal operating parameters of concentric disc valves. The Hattersley high performance valves have enhanced features to provide impeccable performance and reliability.

Valve Figure Number Guide

	BODY		DISC		SHAFT	LINER / BODY SEAL			BODY STYLE		OPERATOR		RATING				
Figure Number	Size Range	Ductile Iron	Aluminium Bronze	Stainless Steel	Stainless Steel	EPDM	Nitrile	EPDM WRAS Approved	Semi Lugged	Fully Lugged	Lever	Gearbox	PN10	PN16	PN25	ANSI Class 125	ANSI Class 150
950	50 - 200mm	✔	✔		✔	✔			✔		✔			✔		✔	
950G	50 - 600mm	✔	✔		✔	✔			✔			✔		✔		✔	
950W†	50 - 200mm	✔	✔		✔			✔	✔		✔			✔			
950WG†	50 - 300mm	✔	✔		✔			✔	✔			✔		✔			
970	50 - 200mm	✔	✔		✔	✔				✔	✔			✔			
970G	50 - 600mm	✔	✔		✔	✔				✔		✔		✔			
970W†	50 - 200mm	✔	✔		✔			✔		✔	✔			✔			
970WG†	50 - 300mm	✔	✔		✔			✔		✔		✔		✔			
951	50 - 200mm	✔	✔		✔		✔		✔		✔			✔		✔	
951G	50 - 600mm	✔	✔		✔		✔		✔			✔		✔		✔	
971	50 - 200mm	✔	✔		✔		✔			✔	✔			✔			
971G	50 - 600mm	✔	✔		✔		✔			✔		✔		✔			
4970	50 - 200mm	✔		✔	✔	✔				✔	✔			✔			
4970G	50 - 600mm	✔		✔	✔	✔				✔		✔		✔			
980 ANSI	2 - 8"	✔	✔		✔	✔					✔			✔			✔
980G ANSI	2 - 24"	✔	✔		✔	✔				✔		✔		✔			✔
4925	50 - 150mm	✔		✔	✔	✔				✔	✔				✔		
4925G	50 - 600mm	✔		✔	✔	✔				✔		✔			✔		
4930G / 5930G	700 -1800mm	✔		✔	✔	✔				✔		✔	1400 -1800 mm	700 -1200 mm			
4930G / 5930G	26 - 56"	✔		✔	✔	✔				✔		✔					✔

† WRAS approved product

110121

Hattersley®
Technical Helpline UK: 0845 604 1790 MEA: +971 4 816 5800
Email UK: tech-enquiries@hattersley.com
MEA: mena-techenquiries@hattersley.com

Fig. 950 & 950G
Semi-lugged Wafer Pattern Lever/Gearbox Operated

IV

FEATURES & BENEFITS

- Robust ductile iron valve body for long life service
- Valve body semi-lugged to fit PN10, PN16, or Class 125 flanges
- Integrated notch plate for a more compact design
- The anti-blow out stem design provides a safe and secure operation
- Fully bonded epoxy paint system for superior corrosion resistance
- Suitable for applications where Level 3 C3 (Medium) corrosion protection is required
- Maintenance free valve design, reducing downtime

Fig. 950 DN50

MATERIAL SPECIFICATION

Component	Material	Specification	
		ASTM	BS EN*
Body	Ductile Iron	ASTM A536 64-45-12	BS EN 1563 5.3107 (EN-GJS-450-10)
Shaft	Stainless Steel 410	ASTM A276 410	BS EN 10083-3 1.4006
Disc	Al Bronze	ASTM B148 C95400	BS EN 1982 CC331G
Taper Pin	Stainless Steel 410	ASTM A276 410	BS EN 10083-3 1.4006
Bushes	PTFE	-	-
O-Ring	Buna N	-	-
Liner	EPDM (WRAS)	-	-
Lever	Aluminium Alloy (Epoxy Paint)	-	-
Gearbox	Cast Iron	-	-

**Closest Match/Equivalent*

PRESSURE/ TEMPERATURE RATING

16 bar from -10 to 130°C

TEST PRESSURES

Hydrostatic
Shell: 24 bar
Seat: 17.6 bar

SPECIFICATION

Conforms to BS EN 593:
Face to face conforms to BS EN 558.
Ductile Iron body epoxy coated.Centring holes.
Aluminium bronze disc.EPDM liner. Trigger lever.
Valves DN250 and larger supplied as standard with fully enclosed gear operator. Sizes DN50 to DN300 are suitable for use with flanges conforming to BS EN 1092-2. PN10 or PN16 and ANSI B16.1 Class 125 Sizes DN350 to DN600 are for PN16 flanges only.
Valves may be used for flow regulation.

DIMENSIONS & WEIGHTS

Fig. 950 LEVER

Nom Size	mm	50	65	80	100	125	150	200
A	mm	109	131.5	134	163	169	179	224
A1	mm	246	278.5	294	343	359	392	465
B	mm	72	82	95	115	125	142	170
C	mm	43	46	46	52	56	56	60
D	mm	32	32	32	32	32	40	40
E	mm	212.5	212.5	212.5	212.5	212.5	245	378
F	mm	100	120	127	156	190	212	268
G	mm	52.9	64.6	79	104.4	123.5	155.8	202.7
Kv***		98	167	258	512	872	1347	2675
Flange slots to suit		PN16/2" CL125	PN16/2.1/2" CL125	PN16/3" CL125	PN16/4" CL125	PN16/5" CL125	PN16/6" CL125	PN16/8" CL125
Weight	kg	2.4	3.3	3.6	4.5	6.3	8.4	13.4

DIMENSIONAL DRAWINGS

Fig. 950 LEVER

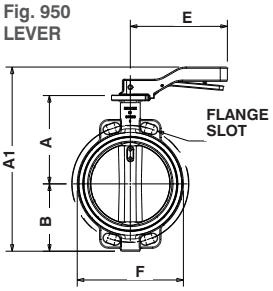

Fig. 950G GEARED

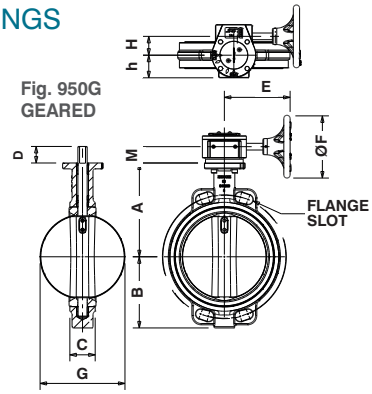

Fig. 950G GEARED

Nom Size	mm	50	65	80	100	125	150	200	250	300	350	400	450	500	600
A	mm	109	131.5	134	163	169	179	224	264	299	368	400	422	479	562
B	mm	72	82	95	115	125	142	170	215	240	264	305	317	352	444
C	mm	43	46	46	52	56	56	60	68	78	78	86	105	130	154
D	mm	32	32	32	32	32	40	40	40	40	-	-	-	-	-
E	mm	157	157	157	157	157	157	238	238	223.5	223.5	277	325	325	340
F	mm	150	150	150	150	150	150	300	300	300	300	450	450	450	450
G	mm	52.9	64.6	79	104.4	123.5	155.8	202.7	250.7	301.9	334	390	441	492	597
H	mm	45	45	45	45	45	45	45	63	78	78	78	185	185	185
h	mm	54	54	54	54	54	54	81	81	81	81	81	160	160	160
M	mm	39	39	39	39	39	39	39	41.5	38.3	46.5	39	120	120	126
Kv***		98	167	258	512	872	1347	2675	4555	7037	6003	8885	10419	13613	17801
Flange slots to suit		PN16/2" CL125	PN16/2.1/2" CL125	PN16/3" CL125	PN16/4" CL125	PN16/5" CL125	PN16/6" CL125	PN16/8" CL125	PN16/8" CL125	PN16/12" CL125	PN16/14" CL125	PN16/16" CL125	PN16/18" CL125	PN16/20" CL125	PN16/24" CL125
Wgt BS*	kg	2.1	3.0	3.2	4.2	6.0	7.8	12.7	28.4	41.0	-	-	-	-	-
Wgt GB**	kg	7.1	7.9	8.2	9.1	10.9	12.7	19.6	38.8	54.0	56.2	88.4	110.2	160.5	260

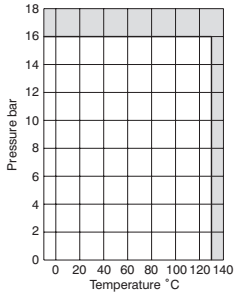

BS* for bareshaft
GB** for gearbox
Kv*** coefficient denotes valves in fully open position

260821

Every effort has been made to ensure that the information contained in this publication is accurate at the time of publishing. Hattersley Ltd assumes no responsibility or liability for typographical errors or omissions or for any misinterpretation of the information within the publication and reserves the right to change without notice.

Fig. 950W & 950WG
Semi-lugged Wafer Pattern Lever/Gearbox Operated

WRAS APPROVED PRODUCT

IV

FEATURES & BENEFITS

- Robust ductile iron valve body for long life service
- WRAS approved for potable water applications -10°C to 80°C
- Valve body semi-lugged to fit PN10, PN16, or Class 125 flanges
- Integrated notch plate for a more compact design
- The anti-blow out stem design provides a safe and secure operation
- Fully bonded epoxy paint system for superior corrosion resistance
- Suitable for applications where Level 3 C3 (Medium) corrosion protection is required
- Maintenance free valve design, reducing downtime

MATERIAL SPECIFICATION

Component	Material	Specification	
		ASTM	BS EN*
Body	Ductile Iron	ASTM A536 64-45-12	BS EN 1563 5.3107 (EN-GJS-450-10)
Shaft	Stainless Steel 410	ASTM A276 410	BS EN 10083-3 1.4006
Disc	Al Bronze	ASTM B148 C95400	BS EN 1982 CC331G
Taper Pin	Stainless Steel 410	ASTM A276 410	BS EN 10083-3 1.4006
Bushes	PTFE	-	-
O-Ring	Buna N	-	-
Liner	EPDM (WRAS)	-	-
Lever	Aluminium Alloy (Epoxy Paint)	-	-
Gearbox	Cast Iron	-	-

**Closest Match/Equivalent*

Fig. 950W DN50

PRESSURE/ TEMPERATURE RATING

PN16 from -10 to 80°C WRAS
PN16 from -10 to 100°C (Non WRAS)

TEST PRESSURES

Hydrostatic
Shell: 24 bar
Seat: 17.6 bar

SPECIFICATION

Conforms to BS EN 593:
Face to face conforms to BS EN 558.
Ductile Iron body epoxy coated.
Centring holes. Aluminium bronze disc.
EPDM liner. Trigger lever.
Valves DN250 and larger supplied as standard with fully enclosed gear operator.
Suitable for use with flanges conforming to BS EN 1092-2 PN10 or PN16 and ANSI B16.1 Class 125
Valves may be used for flow regulation.

DIMENSIONS & WEIGHTS

Fig. 950W LEVER

Nom Size	mm	50	65	80	100	125	150	200
A	mm	109	131.5	134	163	169	179	224
A1	mm	246	278.5	294	343	359	392	465
B	mm	72	82	95	115	125	142	170
C	mm	43	46	46	52	56	56	60
D	mm	32	32	32	32	32	40	40
E	mm	212.5	212.5	212.5	212.5	212.5	245	378
F	mm	100	120	127	156	190	212	268
G	mm	52.9	64.6	79	104.4	123.5	155.8	202.7
Kv***		98	167	258	512	872	1347	2675
Flange slots to suit		PN16/2" CL125	PN16/2.1/2" CL125	PN16/3" CL125	PN16/4" CL125	PN16/5" CL125	PN16/6" CL125	PN16/8" CL125
Weight	kg	2.4	3.3	3.6	4.5	6.3	8.4	13.4

DIMENSIONAL DRAWINGS

Fig. 950W LEVER

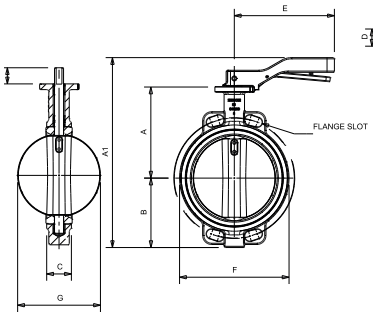

Fig. 950WG GEARED

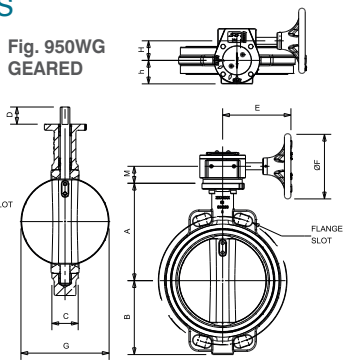

Fig. 950WG GEARED

Nom Size	mm	50	65	80	100	125	150	200	250	300	350	400	450	500	600
A	mm	109	131.5	134	163	169	179	224	264	299	368	400	422	479	562
B	mm	72	82	95	115	125	142	170	215	240	264	305	317	352	444
C	mm	43	46	46	52	56	56	60	68	78	78	86	105	130	154
D	mm	32	32	32	32	32	40	40	40	40	-	-	-	-	-
E	mm	157	157	157	157	157	157	238	238	223.5	223.5	277	325	325	340
F	mm	150	150	150	150	150	150	300	300	300	300	450	450	450	450
G	mm	52.9	64.6	79	104.4	123.5	155.8	202.7	250.7	301.9	334	390	441	492	597
H	mm	45	45	45	45	45	45	45	63	78	78	78	185	185	185
h	mm	54	54	54	54	54	54	81	81	81	81	81	160	160	160
M	mm	39	39	39	39	39	39	39	41.5	38.3	46.5	39	120	120	126
Kv***		98	167	258	512	872	1347	2675	4555	7037	6003	8885	10419	13613	17801
Flange slots to suit		PN16/2" CL125	PN16/2.1/2" CL125	PN16/3" CL125	PN16/4" CL125	PN16/5" CL125	PN16/6" CL125	PN16/8" CL125	PN16/8" CL125	PN16/12" CL125	PN16/14" CL125	PN16/16" CL125	PN16/18" CL125	PN16/20" CL125	PN16/24" CL125
Wgt BS*	kg	2.1	3.0	3.2	4.2	6.0	7.8	12.7	28.4	41.0	-	-	-	-	-
Wgt GB**	kg	7.1	7.9	8.2	9.1	10.9	12.7	19.6	38.8	54.0	56.2	88.4	110.2	160.5	260

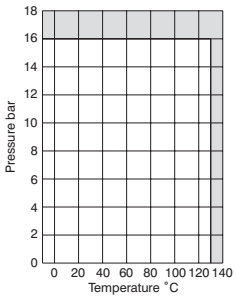

BS* for bareshaft
GB** for gearbox
Kv*** coefficient denotes valves in fully open position

Every effort has been made to ensure that the information contained in this publication is accurate at the time of publishing. Hattersley Ltd assumes no responsibility or liability for typographical errors or omissions or for any misinterpretation of the information within the publication and reserves the right to change without notice.

26/08/21

Hattersley®
Technical Helpline UK: 0845 604 1790 MEA: +971 4 816 5800
Email UK: tech-enquiries@hattersley.com
MEA: mena-techenquiries@hattersley.com

Fig. 970 & 970G
Fully-lugged, Lever/Gearbox Operated

IV

FEATURES & BENEFITS

- Robust ductile iron valve body for long life service
- Integrated notch plate for a more compact design
- The anti-blow out stem design provides a safe and secure operation
- Fully bonded epoxy paint system for superior corrosion resistance
- Suitable for applications where Level 3 C3 (Medium) corrosion protection is required
- Maintenance free valve design, reducing downtime

Fig. 970 DN80

MATERIAL SPECIFICATION

Component	Material	Specification	
		ASTM	BS EN*
Body	Ductile Iron	ASTM A536 64-45-12	BS EN 1563 5.3107 (EN-GJS-450-10)
Shaft	Stainless Steel 410	ASTM A276 410	BS EN 10083-3 1.4006
Disc	Al Bronze	ASTM B148 C95400	BS EN 1982 CC331G
Taper Pin	Stainless Steel 410	ASTM A276 410	BS EN 10083-3 1.4006
Bushes	PTFE	-	-
O-Ring	Buna N	-	-
Liner	EPDM (WRAS)	-	-
Lever	Aluminium Alloy (Epoxy Paint)	-	-
Gearbox	Cast Iron	-	-

**Closest Match/Equivalent*

PRESSURE/ TEMPERATURE RATING

PN16 from -10 to 130°C

TEST PRESSURES

Each valve is individually hydrostatically tested to BS EN 12266-1 at the following test pressures.
Shell: 24 bar
Seat: 17.6 bar

SPECIFICATION

Conforms to BS EN 593.
Face to face conforms to BS EN 558.
Valves DN250 and larger supplied as standard with a fully enclosed gear operator.
Valves may be used for flow regulation.
Suitable for gas applications.
Fig. 970 and 970G are suitable for Group 1 and 2 gases and Group 1 and 2 liquids as defined by the Pressure Equipment Directive 2014/68/EU.

DIMENSIONS & WEIGHTS

Fig. 970 Lever

Nom Size	mm	50	65	80	100	125	150	200
A	mm	109	131.5	134	163	169	179	224
A1	mm	246	278.5	294	343	359	392	465
B	mm	72	82	90	108	125	142	165
C	mm	43	46	46	52	56	56	60
D	mm	32	32	32	32	32	40	40
E	mm	212.5	212.5	212.5	212.5	212.5	245	378
G	mm	52.9	64.6	79	104.4	123.5	155.8	202.7
K	mm	125	145	160	180	210	240	295
Kv***		98	167	258	512	872	1347	2675
n- THREAD		4- M16	4- M16	8- M16	8- M16	8- M16	8- M20	12- M20
Weight	kg	3.6	4.1	5.0	6.5	9.3	11.5	16.8

DIMENSIONAL DRAWINGS

Fig. 970 LEVER

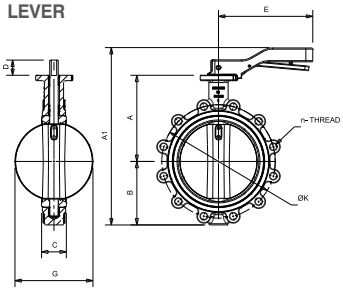

Fig. 970G GEARED

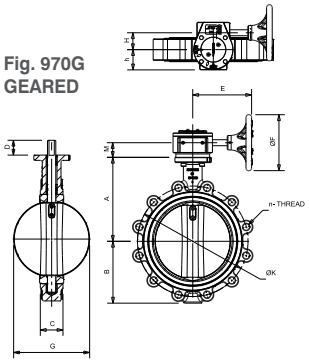

Fig. 970G Geared

Nom Size	mm	50	65	80	100	125	150	200	250	300	350	400	450	500	600
A	mm	109	131.5	134	163	169	179	224	264	299	368	400	422	479	562
B	mm	72	82	90	108	125	142	165	215	240	264	299	317.5	352.5	444
C	mm	43	46	46	52	56	56	60	68	78	78	86	105	130	154
D	mm	32	32	32	32	32	40	40	40	40	-	-	-	-	-
E	mm	157	157	157	157	157	157	238	238	223.5	223.5	277	325	325	340
F	mm	150	150	150	150	300	300	300	300	300	300	450	450	450	450
G	mm	52.9	64.6	79	104.4	123.5	155.8	202.7	250.7	301.9	334	390	441	492	597
H	mm	45	45	45	45	45	45	45	63	78	78	78	185	185	185
h	mm	54	54	54	54	54	54	54	81	81	81	81	160	160	160
M	mm	39	39	39	39	39	39	39	41.5	38.3	46.5	39	120	120	126
Kv***		98	167	258	512	872	1347	2675	4555	7037	6003	8885	10419	13613	17801
n- THREAD		4- M16	4- M16	8- M16	8- M16	8- M16	8- M20	12- M20	12- M24	12- M24	12- M24	16- M27	16- M27	20- M30	20- M33
Wgt BS*	kg	3.3	3.8	4.7	6.2	8.9	11.0	16.1	34.5	51.2	-	-	-	-	-
Wgt GB**	kg	8.3	8.7	9.7	11.2	13.9	15.8	23.0	44.9	64.2	226.0	277.0	277.0	332.0	357.0

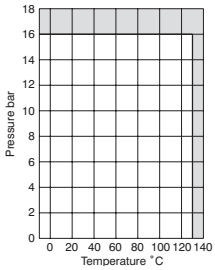

BS* for bareshaft
GB** for gearbox
Kv*** coefficient denotes valves in fully open position

260821

Every effort has been made to ensure that the information contained in this publication is accurate at the time of publishing. Hattersley Ltd assumes no responsibility or liability for typographical errors or omissions or for any misinterpretation of the information within the publication and reserves the right to change without notice.

Fig. 970W & 970WG
Fully-lugged, Lever/Gearbox Operated

WRAS APPROVED PRODUCT

IV

FEATURES & BENEFITS

- Robust ductile iron valve body for long life service
- WRAS approved for potable water applications -10°C to 80°C
- Integrated notch plate for a more compact design
- The anti-blow out stem design provides a safe and secure operation
- Fully bonded epoxy paint system for superior corrosion resistance
- Suitable for applications where Level 3 C3 (Medium) corrosion protection is required
- Maintenance free valve design, reducing downtime

Fig. 970W DN80

MATERIAL SPECIFICATION

Component	Material	Specification	
		ASTM	BS EN*
Body	Ductile Iron	ASTM A536 64-45-12	BS EN 1563 5.3107 (EN-GJS-450-10)
Shaft	Stainless Steel 410	ASTM A276 410	BS EN 10083-3 1.4006
Disc	Al Bronze	ASTM B148 C95400	BS EN 1982 CC331G
Taper Pin	Stainless Steel 410	ASTM A276 410	BS EN 10083-3 1.4006
Bushes	PTFE	-	-
O-Ring	Buna N	-	-
Liner	EPDM (WRAS)	-	-
Lever	Aluminium Alloy (Epoxy Paint)	-	-
Gearbox	Cast Iron	-	-

**Closest Match/Equivalent*

PRESSURE/ TEMPERATURE RATING

PN16 from -10 to 80°C WRAS
PN16 from -10 to 100°C (Non WRAS)

TEST PRESSURES

Each valve is individually hydrostatically tested to BS EN 12266-1 at the following test pressures.
Shell: 24 bar
Seat: 17.6 bar

SPECIFICATION

Conforms to BS EN 593.
Face to face conforms to BS EN 558.
Valves DN250 and larger supplied as standard with a fully enclosed gear operator.
Valves may be used for flow regulation.
Suitable for gas applications.
Fig. 970W and 970WG are suitable for Group 1 and 2 gases and Group 1 and 2 liquids as defined by the Pressure Equipment Directive 2014/68/EU.

DIMENSIONS & WEIGHTS

Fig. 970W Lever

Nom Size	mm	50	65	80	100	125	150	200
A	mm	109	131.5	134	163	169	179	224
A1	mm	246	278.5	294	343	359	392	465
B	mm	72	82	90	108	125	142	165
C	mm	43	46	46	52	56	56	60
D	mm	32	32	32	32	32	40	40
E	mm	212.5	212.5	212.5	212.5	212.5	245	378
G	mm	52.9	64.6	79	104.4	123.5	155.8	202.7
K	mm	125	145	160	180	210	240	295
Kv***		98	167	258	512	872	1347	2675
n- THREAD		4- M16	4- M16	8- M16	8- M16	8- M16	8- M20	12- M20
Weight	kg	3.6	4.1	5.0	6.5	9.3	11.5	16.8

DIMENSIONAL DRAWINGS

Fig. 970W LEVER

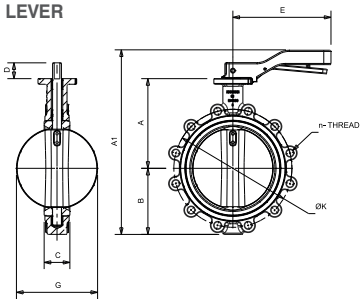

Fig. 970WG GEARED

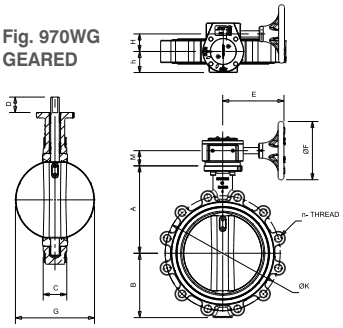

Fig. 970WG Geared

Nom Size	mm	50	65	80	100	125	150	200	250	300	350	400	450	500	600
A	mm	109	131.5	134	163	169	179	224	264	299	368	400	422	479	562
B	mm	72	82	90	108	125	142	165	215	240	264	299	317.5	352.5	444
C	mm	43	46	46	52	56	56	60	68	78	78	86	105	130	154
D	mm	32	32	32	32	32	40	40	40	40	-	-	-	-	-
E	mm	157	157	157	157	157	157	238	238	223.5	223.5	277	325	325	340
F	mm	150	150	150	150	300	300	300	300	300	300	450	450	450	450
G	mm	52.9	64.6	79	104.4	123.5	155.8	202.7	250.7	301.9	334	390	441	492	597
H	mm	45	45	45	45	45	45	45	63	78	78	78	185	185	185
h	mm	54	54	54	54	54	54	54	81	81	81	81	160	160	160
M	mm	39	39	39	39	39	39	39	41.5	38.3	46.5	39	120	120	126
Kv***		98	167	258	512	872	1347	2675	4555	7037	6003	8885	10419	13613	17801
n- THREAD		4- M16	4- M16	8- M16	8- M16	8- M16	8- M20	12- M20	12- M24	12- M24	12- M24	16- M27	16- M27	20- M30	20- M33
Wgt BS*	kg	3.3	3.8	4.7	6.2	8.9	11.0	16.1	34.5	51.2	-	-	-	-	-
Wgt GB**	kg	8.3	8.7	9.7	11.2	13.9	15.8	23.0	44.9	64.2	226.0	277.0	277.0	332.0	357.0

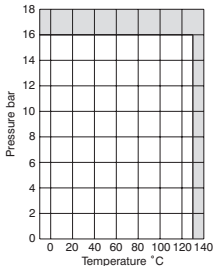

BS* for bareshaft
GB** for gearbox
Kv*** coefficient denotes valves in fully open position

Every effort has been made to ensure that the information contained in this publication is accurate at the time of publishing. Hattersley Ltd assumes no responsibility or liability for typographical errors or omissions or for any misinterpretation of the information within the publication and reserves the right to change without notice.

260821

Hattersley®
Technical Helpline UK: 0845 604 1790 MEA: +971 4 816 5800
Email UK: tech-enquiries@hattersley.com
MEA: mena-techenquiries@hattersley.com

Fig. 951 & 951G
Semi-lugged Wafer Pattern Lever/Gearbox Operated

IV

FEATURES & BENEFITS

- Robust ductile iron valve body for long life service
- Valve body semi-lugged to fit PN10, PN16, or Class 125 flanges
- Integrated notch plate for a more compact design
- The anti-blow out stem design provides a safe and secure operation
- Fully bonded epoxy paint system for superior corrosion resistance
- Suitable for applications where Level 3 C3 (Medium) corrosion protection is required
- Maintenance free valve design, reducing downtime

Fig. 951 DN50

MATERIAL SPECIFICATION

Component	Material	Specification
Body	Ductile Iron (Epoxy Paint)	ASTM A536 64-45-12
Disc	Aluminium Bronze	C954 ASTM B148
Liner	Nitrile	-
Shaft	Stainless Steel Type 410	ASTM A276 410
Taper Pin	Stainless Steel Type 410	ASTM A276 410
O-Ring	Buna-N	-
Bushing	PTFE	-
Lever	Aluminium Alloy (Epoxy Paint)	-
Gearbox	Cast Iron	-

PRESSURE/ TEMPERATURE RATING

PN16 from -10 to 90°C

TEST PRESSURES

Each valve is individually hydrostatically tested to BS EN 12266-1 at the following test pressures.
Shell: 24 bar
Seat: 17.6 bar

SPECIFICATION

Conforms to BS EN 593.
Sizes DN50 to DN300 are suitable for use with flanges conforming to BS EN 1092-2 PN10 or PN16 and ANSI B16.1 Class 125.
Sizes DN350 to DN600 are for PN16 flanges only.
Valves DN250 and larger supplied as standard with a fully enclosed gear operator.
Valves may be used for flow regulation.
Figures 951 and 951G are suitable for Group 1 and 2 gases and Group 1 and 2 liquids as defined by the Pressure Equipment Directive 2014/68/EU.

DIMENSIONS & WEIGHTS

Fig. 951 LEVER

Nom Size	mm	50	65	80	100	125	150	200
A	mm	109	131.5	134	163	169	179	224
A1	mm	246	278.5	294	343	359	392	465
B	mm	72	82	95	115	125	142	170
C	mm	43	46	46	52	56	56	60
D	mm	32	32	32	32	32	40	40
E	mm	212.5	212.5	212.5	212.5	212.5	245	378
F	mm	100	120	127	156	190	212	268
G	mm	52.9	64.6	79	104.4	123.5	155.8	202.7
Kv***		98	167	258	512	872	1347	2675
Flange slots to suit		PN16/2" CL125	PN16/2.1/2" CL125	PN16/3" CL125	PN16/4" CL125	PN16/5" CL125	PN16/6" CL125	PN16/8" CL125
Weight	kg	2.4	3.3	3.6	4.5	6.3	8.4	13.4

DIMENSIONAL DRAWINGS

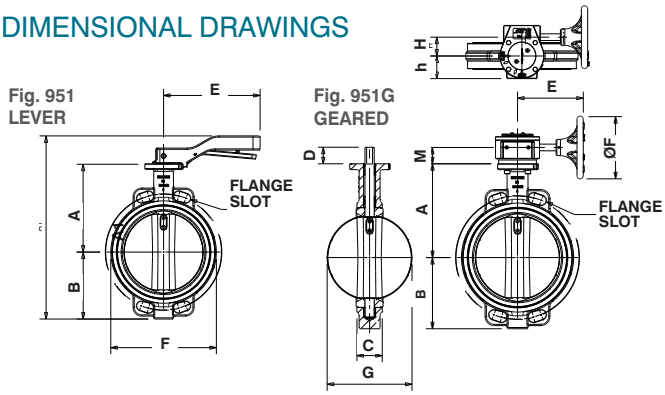

Fig. 951G GEARED

Nom Size	mm	50	65	80	100	125	150	200	250	300	350	400	450	500	600
A	mm	109	131.5	134	163	169	179	224	264	299	368	400	422	479	562
B	mm	72	82	95	115	125	142	170	215	240	264	305	317	352	444
C	mm	43	46	46	52	56	56	60	68	78	78	86	105	130	154
D	mm	32	32	32	32	32	40	40	40	40	-	-	-	-	-
E	mm	157	157	157	157	157	157	238	238	223.5	223.5	277	325	325	340
F	mm	150	150	150	150	150	150	300	300	300	300	450	450	450	450
G	mm	52.9	64.6	79	104.4	123.5	155.8	202.7	250.7	301.9	334	390	441	492	597
H	mm	45	45	45	45	45	45	45	63	78	78	78	185	185	185
h	mm	54	54	54	54	54	54	81	81	81	81	81	160	160	160
M	mm	39	39	39	39	39	39	39	41.5	38.3	46.5	39	120	120	126
Kv***		98	167	258	512	872	1347	2675	4555	7037	6003	8885	10419	13613	17801
Flange slots to suit		PN16/2" CL125	PN16/2.1/2" CL125	PN16/3" CL125	PN16/4" CL125	PN16/5" CL125	PN16/6" CL125	PN16/8" CL125	PN16/8" CL125	PN16/12" CL125	PN16/14" CL125	PN16/16" CL125	PN16/18" CL125	PN16/20" CL125	PN16/24" CL125
Wgt BS*	kg	2.1	3.0	3.2	4.2	6.0	7.8	12.7	28.4	41.0	-	-	-	-	-
Wgt GB**	kg	7.1	7.9	8.2	9.1	10.9	12.7	19.6	38.8	54.0	56.2	88.4	110.2	160.5	260

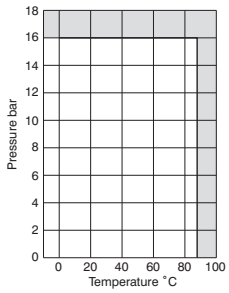

BS* for bareshaft
GB** for gearbox
Kv*** coefficient denotes valves in fully open position

110121

Every effort has been made to ensure that the information contained in this publication is accurate at the time of publishing. Hattersley Ltd assumes no responsibility or liability for typographical errors or omissions or for any misinterpretation of the information within the publication and reserves the right to change without notice.

Fig. 971 & 971G
Fully-lugged, Lever/Gearbox Operated

IV

FEATURES & BENEFITS

- Robust ductile iron valve body for long life service
- Integrated notch plate for a more compact design
- The anti-blow out stem design provides a safe and secure operation
- Fully bonded epoxy paint system for superior corrosion resistance
- Suitable for applications where Level 3 C3 (Medium) corrosion protection is required
- Maintenance free valve design, reducing downtime

Fig. 971 DN80

MATERIAL SPECIFICATION

Component	Material	Specification
Body	Ductile Iron (Epoxy Paint)	ASTM A536 64-45-12
Disc	Aluminium Bronze	C954 ASTM B148
Liner	Nitrile	-
Shaft	Stainless Steel Type 410	ASTM A276 410
Taper Pin	Stainless Steel Type 410	ASTM A276 410
O-Ring	Buna-N	-
Bushing	PTFE	-
Lever	Aluminium Alloy (Epoxy Paint)	-
Gearbox	Cast Iron	-

PRESSURE/ TEMPERATURE RATING

PN16 from -10 to 90°C

TEST PRESSURES

Each valve is individually hydrostatically tested to BS EN 12266-1 at the following test pressures.
Shell: 24 bar
Seat: 17.6 bar

SPECIFICATION

Conforms to BS EN 593.
Face to face conforms to BS EN 558.
Valves DN250 and larger supplied as standard with a fully enclosed gear operator.
Valves may be used for flow regulation.
Suitable for gas applications.
Fig. 971 and 971G are suitable for Group 1 and 2 gases and Group 1 and 2 liquids as defined by the Pressure Equipment Directive 2014/68/EU.

DIMENSIONS & WEIGHTS

Fig. 971 LEVER

Nom Size	mm	50	65	80	100	125	150	200
A	mm	109	131.5	134	163	169	179	224
A1	mm	246	278.5	294	343	359	392	465
B	mm	72	82	90	108	125	142	165
C	mm	43	46	46	52	56	56	60
D	mm	32	32	32	32	32	40	40
E	mm	212.5	212.5	212.5	212.5	212.5	245	378
G	mm	52.9	64.6	79	104.4	123.5	155.8	202.7
K	mm	125	145	160	180	210	240	295
Kv***		98	167	258	512	872	1347	2675
n- THREAD		4- M16	4- M16	8- M16	8- M16	8- M16	8- M20	12- M20
Weight	kg	3.6	4.1	5.0	6.5	9.3	11.5	16.8

DIMENSIONAL DRAWINGS

Fig. 971 LEVER

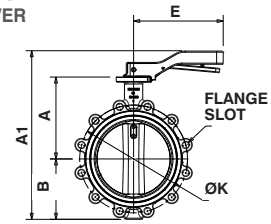

Fig. 971G GEARED

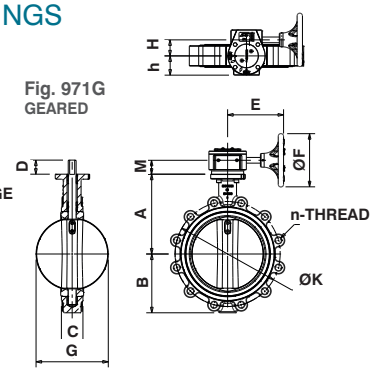

Fig. 971G GEARED

Nom Size	mm	50	65	80	100	125	150	200	250	300	350	400	450	500	600
A	mm	109	131.5	134	163	169	179	224	264	299	368	400	422	479	562
B	mm	72	82	90	108	125	142	165	215	240	264	299	317.5	352.5	444
C	mm	43	46	46	52	56	56	60	68	78	78	86	105	130	154
D	mm	32	32	32	32	32	40	40	40	40	-	-	-	-	-
E	mm	157	157	157	157	157	157	238	238	223.5	223.5	277	325	325	340
F	mm	150	150	150	150	300	300	300	300	300	300	450	450	450	450
G	mm	52.9	64.6	79	104.4	123.5	155.8	202.7	250.7	301.9	334	390	441	492	597
H	mm	45	45	45	45	45	45	45	63	78	78	78	185	185	185
h	mm	54	54	54	54	54	54	54	81	81	81	81	160	160	160
M	mm	39	39	39	39	39	39	39	41.5	38.3	46.5	39	120	120	126
Kv***		98	167	258	512	872	1347	2675	4555	7037	6003	8885	10419	13613	17801
n- THREAD		4- M16	4- M16	8- M16	8- M16	8- M16	8- M20	12- M20	12- M24	12- M24	12- M24	16- M27	16- M27	20- M30	20- M33
Wgt BS*	kg	3.3	3.8	4.7	6.2	8.9	11.0	16.1	34.5	51.2	-	-	-	-	-
Wgt GB**	kg	8.3	8.7	9.7	11.2	13.9	15.8	23.0	44.9	64.2	226.0	277.0	277.0	332.0	357.0

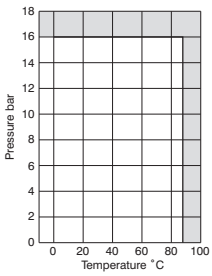

BS* for bareshaft
GB** for gearbox
Kv*** coefficient denotes valves in fully open position

Every effort has been made to ensure that the information contained in this publication is accurate at the time of publishing. Hattersley Ltd assumes no responsibility or liability for typographical errors or omissions or for any misinterpretation of the information within the publication and reserves the right to change without notice.

110121

Hattersley®
Technical Helpline UK: 0845 604 1790 MEA: +971 4 816 5800
Email UK: tech-enquiries@hattersley.com
MEA: mena-techenquiries@hattersley.com

Fig. 4970 & 4970G
Fully-lugged Lever/Gearbox Operated

IV

FEATURES & BENEFITS

- Robust, ductile Iron valve bodies for long service life
- Stainless steel disc for improved strength and a wide range of applications
- Valve body fully-lugged for secure installation
- Integrated notch plate for a more compact design
- The anti-blow out stem design provides a safe and secure operation
- Fully bonded epoxy paint system for superior corrosion resistance
- Suitable for applications where Level 3 C3 (Medium) corrosion protection is required
- Maintenance free valve design, reducing downtime

Fig. 4970 DN80

MATERIAL SPECIFICATION

Component	Material	Specification
Body	Ductile Iron (Epoxy Paint)	ASTM A536 64-45-12
Operating Shaft	Stainless Steel 410	ASTM A276 410
Disc	Stainless Steel 316	ASTM A351 CF8M
Taper Pins	Stainless Steel 410	ASTM A276 410
Bushes	PTFE	-
O-Ring	Buna N	-
Liner	EPDM	-
Lever	Aluminium Alloy (Epoxy Paint)	-
Gearbox	Cast Iron	-

PRESSURE/ TEMPERATURE RATING

16 bar from -10 to 120°C
15.7 bar at 130°C

TEST PRESSURES

Shell: 24 bar
Seat: 17.6 bar

SPECIFICATION

Generally conforms to BS EN 593.
Ductile Iron body epoxy coated.
Face to face conforms to BS EN 558.
Stainless steel disc.
EPDM liner.
To suit flange connections BS EN 1092-2 PN16.
Valves may be used for flow regulation.
Fig. 4970 and 4970G are suitable for Group 2 liquids as defined by the Pressure Equipment Directive 2014/68/EU.

DIMENSIONS & WEIGHTS

Fig. 4970 Lever

Nom Size	mm	50	65	80	100	125	150	200
A	mm	109	131.5	134	163	169	179	224
A1	mm	246	278.5	294	343	359	392	465
B	mm	72	82	90	108	125	142	165
C	mm	43	46	46	52	56	56	60
D	mm	32	32	32	32	32	40	40
E	mm	212.5	212.5	212.5	212.5	212.5	245	378
G	mm	52.9	64.6	79	104.4	123.5	155.8	202.7
K	mm	125	145	160	180	210	240	295
Kv***		98	167	258	512	872	1347	2675
n- THREAD		4- M16	4- M16	8- M16	8- M16	8- M16	8- M20	12- M20
Weight	kg	3.6	4.1	5.0	6.5	9.3	11.5	16.8

DIMENSIONAL DRAWINGS

Fig. 4970 LEVER

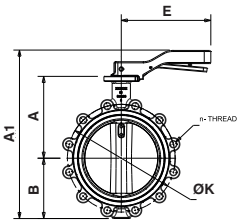

Fig. 4970G GEARED

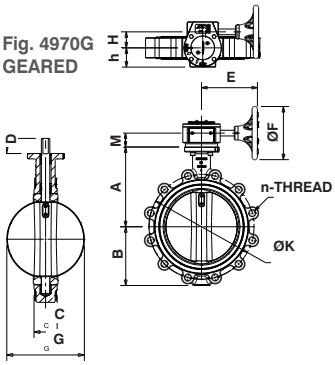

Fig. 4970G Geared

Nom Size	mm	50	65	80	100	125	150	200	250	300	350	400	450	500	600
A	mm	109	131.5	134	163	169	179	224	264	299	368	400	422	479	562
B	mm	72	82	90	108	125	142	165	215	240	264	299	317.5	352.5	444
C	mm	43	46	46	52	56	56	60	68	78	78	86	105	130	154
D	mm	32	32	32	32	32	40	40	40	40	-	-	-	-	-
E	mm	157	157	157	157	157	157	238	238	223.5	223.5	277	325	325	340
F	mm	150	150	150	150	300	300	300	300	300	300	450	450	450	450
G	mm	52.9	64.6	79	104.4	123.5	155.8	202.7	250.7	301.9	334	390	441	492	597
H	mm	45	45	45	45	45	45	45	63	78	78	78	185	185	185
h	mm	54	54	54	54	54	54	54	81	81	81	81	160	160	160
M	mm	39	39	39	39	39	39	39	41.5	38.3	46.5	39	120	120	126
Kv***		98	167	258	512	872	1347	2675	4555	7037	6003	8885	10419	13613	17801
n- THREAD		4- M16	4- M16	8- M16	8- M16	8- M20	12- M20	12- M24	12- M24	12- M24	16- M27	16- M27	20- M30	20- M33	
Wgt BS*	kg	3.3	3.8	4.7	6.2	8.9	11.0	16.1	34.5	51.2	-	-	-	-	-
Wgt GB**	kg	8.3	8.7	9.7	11.2	13.9	15.8	23.0	44.9	64.2	226.0	277.0	277.0	332.0	357.0

BS* for bareshaft GB** for gearbox Kv*** coefficient denotes valves in fully open position

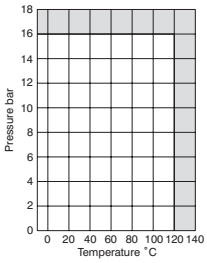

110121

Every effort has been made to ensure that the information contained in this publication is accurate at the time of publishing. Hattersley Ltd assumes no responsibility or liability for typographical errors or omissions or for any misinterpretation of the information within the publication and reserves the right to change without notice.

Fig. 980 ANSI
Fully-lugged, Lever/Gearbox Operated Class 150

IV

MATERIAL SPECIFICATION

Component	Material	Specification	
		BS EN	ASTM
Body	Ductile Iron	BS EN 1563 EN-GJS-450-10	A536 65-45-12
Operating Shaft	Stainless Steel	BS EN 10088-1 1.4005	A582 UNS S41600
Disc	Al Bronze	BS EN 1982 CC331G	B148 UNS C95400
Taper pins	Stainless Steel	BS EN 10088-1 1.4401	A276 UNS S31600
Bushing	PTFE	-	-
O-Ring	Buna -N	-	-
Liner	EPDM	-	-
Lever	Carbon Steel	-	-
Handwheel	Cast Iron	-	-

DIMENSIONAL DRAWINGS

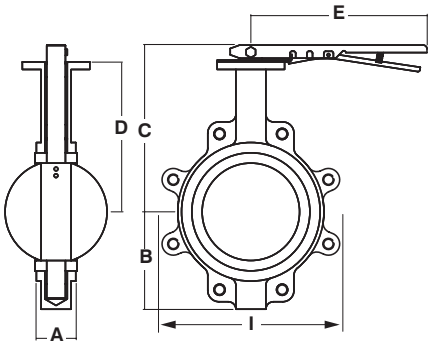

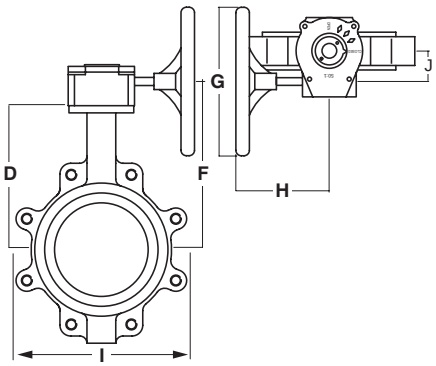

PRESSURE/ TEMPERATURE RATING

19.65 bar from -10 to 37.8°C
16.93 bar at 120°C

TEST PRESSURES

Shell: 29.5 bar
Seat: 21.6 bar

SPECIFICATION

Generally conforms to BS EN 593.
Ductile Iron body epoxy coated.
Fully lugged.
Aluminium bronze disc.
EPDM liner phenolic backed.
Trigger Lever.
Valves DN200 and larger supplied as standard with fully enclosed gear operator.
Suitable for fitting between flanges to ANSI B16.1 Class 125 and 150.
Valves may be used for flow regulation.

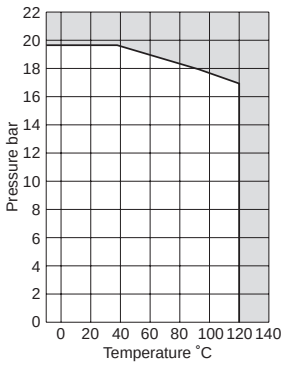

DIMENSIONS & WEIGHTS

Nom Size	inch	2	2 1/2	3	4	5	6	8	10	12	14	16	18	20	24
A	mm	44.45	47.63	47.63	53.98	57.15	57.15	63.5	69.85	79.38	79.25	79.25	119.89	151.89	151.89
B	mm	83	95	102	124	136	150	197	210	248	279	305	381	381	457
C	mm	193.42	206.12	212.47	231.52	244.22	256.92	294.39	326.14	370.59	-	-	-	-	-
D	mm	161.93	174.63	180.98	200.03	212.73	225.43	260.35	292.1	336.55	368.3	400.05	422.28	479.43	561.98
E	mm	259.59	259.59	259.59	259.59	259.59	259.59	348.23	348.23	348.23	-	-	-	-	-
F	mm	150	150	150	150	300	300	300	300	300	300	450	450	450	450
G	mm	152.4	152.4	152.4	152.4	203.2	203.2	304.8	304.8	304.8	304.8	457.2	457.2	457.2	457.2
H	mm	159.51	159.51	159.51	159.51	150.37	150.37	241.81	241.81	227.08	225.81	232.16	277.11	321.06	384.05
I	mm	154.78	179.39	190.09	219.87	254	285.75	339.73	406.4	477.84	517.53	565.15	629.92	685.80	809.98
Weight	kg	15.5	16	18.7	24.1	25	26.4	36.7	47.1	62.1	84.9	123.8	139.7	215.5	337.3

Every effort has been made to ensure that the information contained in this publication is accurate at the time of publishing. Hattersley Ltd assumes no responsibility or liability for typographical errors or omissions or for any misinterpretation of the information within the publication and reserves the right to change without notice.

110121

Hattersley®
Technical Helpline UK: 0845 604 1790 MEA: +971 4 816 5800
Email UK: tech-enquiries@hattersley.com
MEA: mena-techenquiries@hattersley.com

Fig.4925 & Fig.4925G
Fully-lugged, Lever/Gearbox Operated

FEATURES & BENEFITS

- Robust, ductile iron valve bodies for long service life
- Stainless steel disc for improved strength and a wide range of applications
- Suitable for wide temperature range -10°C to 120°C
- Fully lugged for secure installation
- Rated PN25 for higher pressure applications
- Lever (4925) and Gearbox (4925G) options available
- Extended size range for application requirements

Fig. 4925G

MATERIAL SPECIFICATION

No.	Component	Material	Specification	Size
1	Body	DI (EN-GJS-400-15)	ASTM A536 65-45-12	DN50 - DN300
1	Body	Ductile Iron	EN-GJS-450-10	DN350 - DN600
2	Disc	Stainless Steel 304	ASTM A351 CF8	-
3	Shaft	Stainless Steel 431	ASTM A276 431	DN50 - DN300
3	Shaft	Stainless Steel 630	ASTM A564 630	DN350 - DN600
4	Short Bushing	Aluminum Bronze	ASTM B148-952A	-
5	Seat	EPDM	-	-
6	Long Bushing	Aluminum Bronze	ASTM B148-952A	-
7	Long Bushing	Aluminum Bronze	ASTM B148-952A	-
8	'O' Ring	NBR	-	-
9	Pin	Stainless Steel 431	ASTM A276 431	DN50 - DN300
9	Pin	Stainless Steel 630	ASTM A564 630	DN350 - DN600
10	Top Cap (Fig.4925)	Carbon Steel	ASTM A194 Gr. 2H	-
10	Hand Wheel (Fig.4925G)	-	-	-
11	Bolt	Carbon Steel	ASTM A194 Gr. 2H	-
12	Lever (Fig.4925)	Malleable Iron	ASTM Gr. 32510	-
12	Gear Box (Fig.4925G)	Cast Iron	EN-GJL-250	DN50 - DN300
12	Gear Box (Fig.4925G)	Ductile Iron	EN-GJS-450-10	DN350 - DN600

PRESSURE/ TEMPERATURE RATING

25 bar from -10°C to 120°C

SPECIFICATION

Medium: Group 2 Liquids
Flanges: Fully Lugged To BS EN1092-2
Face to face conforms to BS EN 558
Design Standard: BS EN 593 2009
Test And Inspection Standard: BS EN 12266-1
Mounting Flange: ISO 5211-2001

DIMENSIONS & WEIGHTS

Fig. 4925 Lever Butterfly Valve

Nom Size	mm	50	65	80	100	125	150
A	mm	138	153	155	178	193	210
B	mm	65	83	88	105.5	123	135
C	mm	43	46	46	52	56	56
ØD	mm	125	145	160	190	220	250
N-M	mm	4-M16	8-M16	8-M16	8-M20	8-M24	8-M24
H	mm	32	32	32	32	32	32
L	mm	216	216	216	265	265	265
a°		45°	22.5°	22.5°	22.5°	22.5°	22.5°
Kv*		91	141	247	586	861	1839

Fig. 4925G Geared Butterfly Valve

Nom Size	mm	50	65	80	100	125	150	200	250	300	350	400	450	500	600
A	mm	138	153	155	178	193	210	240	285.4	315	350	385	410	435	505
B	mm	65	83	88	105.5	123	135	172	202	234.5	300	330	360	400	455
C	mm	43	46	46	52	56	56	60	68	78	78	102	114	127	154
ØD	mm	125	145	160	190	220	250	310	370	430	490	550	600	660	770
N-M	mm	4-M16	8-M16	8-M16	8-M20	8-M24	8-M24	12-M24	12-M27	16-M27	16-M30	16-M33	20-M33	20-M33	20-M36
ØDD	mm	150	150	150	150	150	150	300	300	300	300	300	400	400	400
L1		173.5	173.5	173.5	173.5	173.5	173.5	237	237	229.5	254	254	301	355	355
L2		249	264	266	289	304	321	436	481.5	524	610	645	738	792	862
a°		45°	22.5°	22.5°	22.5°	22.5°	22.5°	15°	15°	11.25°	11.25°	11.25°	9°	9°	9°
Kv*		91	141	247	586	861	1839	2688	4576	4576	9404	11840	15217	18928	27545

*Kv data denotes valves at fully open position

DIMENSIONAL DRAWINGS

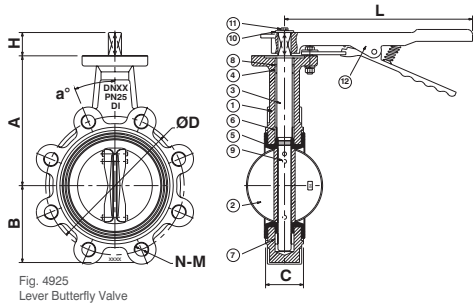

Fig. 4925
Lever Butterfly Valve

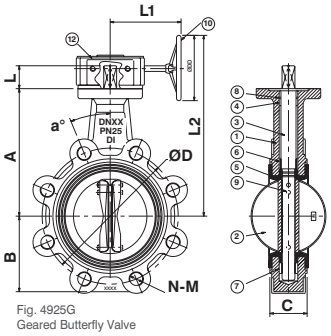

Fig. 4925G
Geared Butterfly Valve

Every effort has been made to ensure that the information contained in this publication is accurate at the time of publishing. Hattersley Ltd assumes no responsibility or liability for typographical errors or omissions or for any misinterpretation of the information within the publication and reserves the right to change without notice.

110121

Fig. 4930G / 5930G & Fig. 4930BS
Fully-lugged, Gearbox Operated / Bare Shaft

FEATURES & BENEFITS

- Manufactured to BS EN 593: 2009
- Suitable for Gearbox or Actuator operation
- Rugged construction: Ductile Iron Body for all sizes
- Stainless Steel disc for a wide range of applications
- Epoxy paint coated for enhanced durability
- Low operating torques

MATERIALS

No	Part	Material	Specification
1	Key	Carbon Steel	ASTM A29 1045
2	Screw	Carbon Steel	ASTM A194 Gr.2H
3	Short Bushing	-	PTFE
4	O' Ring	-	NBR
5	Upper Shaft	Stainless Steel	ASTM A276 420
6	Body	Ductile Iron	EN-GJS-500-7U
7	Long Bushing	-	PTFE
8	Seat + Backing Ring	-	EPDM + Aluminium
9	Disc: 4930G/4930BS Disc: 5930G	Stainless Steel 316 Stainless Steel 304	ASTM A351 CF8M ASTM A351 CF8
10	Pin	Stainless Steel	ASTM A276 431
11	Lower Shaft	Stainless Steel	ASTM A276 420
12	Split Retaining Ring	Carbon Steel	ASTM A29-1045
13	Bearing	High Carbon Steel	ASTM A295 52100
14	Screw	Carbon Steel	ASTM A194 Gr. 2H
15	Lower Gland	Carbon Steel	EN-GJS-500-7U
16	Gearbox	Ductile Iron	EN-GJS-400-15

DIMENSIONAL DRAWINGS

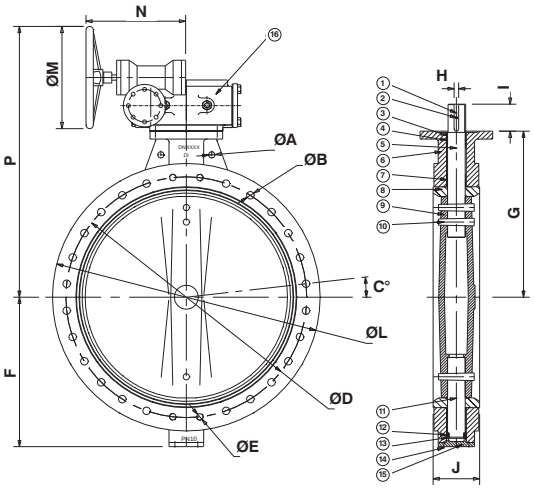

PRESSURE RATING:

DN700 - DN1200 PN16, DN1400 - DN1800 PN10

TEMPERATURE RATING:

-10° to 110°C

SPECIFICATION

Face to Face dimensions: to BS EN 558: 2011 Series 20

End Connections: Flanges to BS EN 1092-2 PN10 and PN16

Actuator mounting flanges: to ISO 5211: 2001

Operators: Gearbox - Fig.4930G (Disc SS 316) / Fig.5930G (Disc SS 304)

Bareshaft Valve options: Fig.4930BS

Suitable for use on Group 2 Liquids only, and limited to 110°C use as defined by Pressure Equipment Directive 2014/68/EU, and Pressure Equipment (Safety) Regulations 2016, as amended.

Not suitable for use on Group 1 & Group 2 Gases, Group 1 Liquids or unstable liquids.

DIMENSIONS & WEIGHTS

Size (DN)	A (mm)	B (mm)	C (mm)	D (mm)	E (mm)	F (mm)	G (mm)	H (mm)	I (mm)	J (mm)	K (mm)	L (mm)	M (mm)	N (mm)	P (mm)	Flange Thickness	Weight (kg) Gearbox	Weight (kg) Bareshaft	Flow (kv)
DN700	N/A	20-Ø37	7.5	840	4-M33	537	629	18	110	165	N/A	910	398	397	883	39.5	350	310	42818
DN800	N/A	20-Ø41	7.5	950	4-M36	596	666	20	110	190	4-Ø40	1025	500	417	971	43	450	410	33086
DN900	N/A	24-Ø41	6.43	1050	4-M36	656	720	20	110	203	4-Ø42	1125	500	450	1032	46.5	605	550	75688
DN1000	2-Ø40	24-Ø44	6.43	1170	4-M39	720	800	22	130	216	4-Ø45	1255	500	470	1109	50	810	740	103584
DN1200	2-Ø46	28-Ø50	5.625	1390	4-M45	864	942	28	130	254	N/A	1485	600	491	1327	57	1270	1130	133210
DN1400	2-Ø48	32-Ø44	5	1590	4-M39	1014	1000	40	180	279	N/A	1675	600	491	1385	46	1645	1510	152700
DN1600	2-Ø50	36-Ø50	4.5	1820	4-M45	1071	1155	40	180	318	N/A	1915	500	571	1685	49	3540	3200	175700
DN1800	2-Ø50	40-Ø50	4.09	2020	4-M45	1178	1300	45	200	356	N/A	2115	500	665	1853	52	5900	5310	211060

Every effort has been made to ensure that the information contained in this publication is accurate at the time of publishing. Hattersley Ltd assumes no responsibility or liability for typographical errors or omissions or for any misinterpretation of the information within the publication and reserves the right to change without notice.

230922

Hattersley®
Technical Helpline UK: 0845 604 1790 MEA: +971 4 816 5800
Email UK: tech-enquiries@hattersley.com
MEA: mena-techenquiries@hattersley.com

Fig. 4930G / 5930G ANSI & Fig. 4930BS ANSI
Fully-lugged, Gearbox Operated / Bare Shaft

FEATURES & BENEFITS

- Manufactured to BS EN 593: 2009
- Suitable for Gearbox or Actuator operation
- Rugged construction: Ductile Iron Body for all sizes
- Stainless Steel disc as standard
- Epoxy paint coated as standard
- Low operating torques

MATERIALS

No	Part	Material	Specification
1	Key	Carbon Steel	ASTM A29 1045
2	Screw	Carbon Steel	ASTM A194 Gr.2H
3	Short Bushing	-	PTFE
4	O’ Ring	-	NBR
5	Upper Shaft	Stainless Steel	ASTM A276 420
6	Body	Ductile Iron	EN-GJS-500-7U
7	Long Bushing	-	PTFE
8	Seat + Backing Ring	-	EPDM + Aluminium
9	Disc: 4930G/4930BS ANSI Disc: 5930G ANSI	Stainless Steel 316 Stainless Steel 304	ASTM A351 CF8M ASTM A351 CF8
10	Pin	Stainless Steel	ASTM A276 431
11	Lower Shaft	Stainless Steel	ASTM A276 420
12	Split Retaining Ring	Carbon Steel	ASTM A29-1045
13	Bearing	High Carbon Steel	ASTM A295 52100
14	Screw	Carbon Steel	ASTM A194 Gr. 2H
15	Lower Gland	Carbon Steel	EN-GJS-500-7U
16	Gearbox	Ductile Iron	EN-GJS-400-15

DIMENSIONAL DRAWINGS

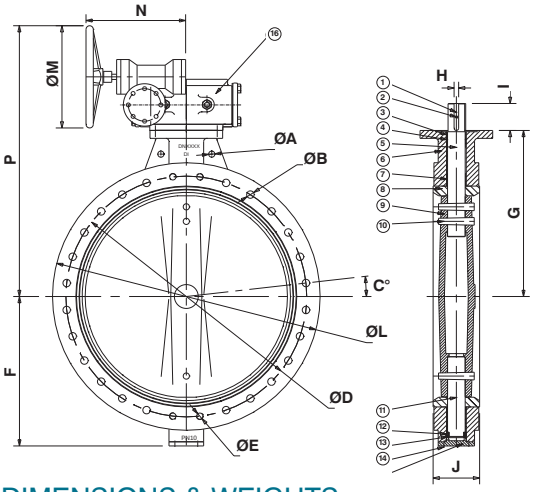

PRESSURE RATING:

26” - 48” PN16; 56” PN10

TEMPERATURE RATING:

-10° to 110°C

SPECIFICATION

Face to Face dimensions:
to BS EN 558: 2011 Series 20

End Connections: To mount between ASME B16.47 Series A

Actuator mounting flanges:
ISO 5211: 2001

Operators: Fig.4930G (Disc SS 316) / 5930G (Disc SS 304))

Bareshaft Valve options:
Fig.4930BS ANSI

Suitable for use on Group 2 Liquids only, and limited to 110°C use as defined by Pressure Equipment Directive 2014/68/EU, and Pressure Equipment (Safety) Regulations 2016, as amended.

Not suitable for use on Group 1 & Group 2 Gases, Group 1 Liquids or unstable liquids.

DIMENSIONS & WEIGHTS

Size (inch)	A (mm)	B (mm)	C (mm)	D (mm)	E (mm)	F (mm)	G (mm)	H (mm)	I (mm)	J (mm)	K (mm)	L (mm)	M (mm)	N (mm)	P (mm)	FLANGE THICKNESS	WEIGHT (kg)		Flow (kv)
																	Gearbox	Bareshaft	
26"	N/A	20-Ø35	7.5	806.5	4-1.25-7	485	565	14	110	165	N/A	870	600	346	913	39.5	307	270	37300
28"	N/A	24-Ø35	6.43	863.6	4-1.25-7	537	629	18	110	165	4-Ø40	927	398	397	883	39.5	380	340	42818
30"	N/A	24-Ø35	6.43	914.4	4-1.25-7	565	660	18	110	165	4-Ø40	984	500	417	965	43	410	370	63513
32"	N/A	24-Ø41	6.43	977.9	4-1.5-6	596	666	20	110	190	4-Ø40	1060	500	417	971	43	490	450	33086
34"	N/A	28-Ø41	5.625	1028.7	4-1.5-6	633	720	20	110	200	4-Ø40	1111	500	450	1032	45	585	530	52300
36"	N/A	28-Ø41	5.625	1085.9	4-1.5-6	656	720	20	110	203	4-Ø42	1168	500	450	1032	46.5	665	610	75688
38"	N/A	28-Ø41	5.625	1149.4	4-1.5-6	675	708	22	110	200	4-Ø44	1238	600	450	1070	50	745	690	91500
40"	2-Ø40	32-Ø41	5	1200.1	4-1.5-6	720	800	22	130	216	4-Ø45	1289	500	470	1109	50	830	760	103584
42"	N/A	32-Ø41	5	1257.3	4-1.5-6	772	850	22	130	251	4-Ø47	1346	500	470	1159	53.5	1070	1000	101638
48"	2-Ø46	40-Ø41	4.1	1422.4	4-1.5-6	864	942	28	130	254	N/A	1511	600	491	1327	57	1300	1160	133210
56"	2-Ø48	44-Ø47.8	3.75	1651	4-1.75-5	1014	1000	40	180	279	N/A	1746	600	491	1385	46	1676	1550	152700

230922

Every effort has been made to ensure that the information contained in this publication is accurate at the time of publishing. Hattersley Ltd assumes no responsibility or liability for typographical errors or omissions or for any misinterpretation of the information within the publication and reserves the right to change without notice.

Project: One Bank Street

Client: Canary Wharf Group PLC

Location: 1 Bank Street, London E14

M&E Contractor: SES

Distributor: BSS

Specification: One Bank Street is a 28 storey office building with ground floor space for restaurant and retail use in Canary Wharf. The development has the capacity to bring an extra 5,800 full time jobs to the area.

As well as high end office space the building features three levels of cutting edge trading floors, along with retail and restaurant units at the ground level and below that a basement car and cycle park.

The project has opened up public access to a new promenade on the South Dock with its own freestanding retail kiosk.

Hattersley has provided a range of general valves including butterfly, balancing and check valves for the project.

S Shand-Brown

041219

Hattersley®

Technical Helpline UK: 0845 604 1790 MEA: +971 4 816 5800
Email UK: tech-enquiries@hattersley.com
MEA: mena-techenquiries@hattersley.com

Project: The Post Building

Location: London

M&E Contractor: Crown House Technologies

Distributor: BSS

Specification:
Balancing valves including DPCV, public health and general valves.

Originally a Royal Mail sorting office built in the 1960's, The Post Building has 270,000 sq ft of office space, private roof terraces and a 7,500 sq ft rooftop garden. The lower ground floor provides 470 cycle spaces, lockers, showers and a bike workshop facility.

The site houses public elements like independent retailers, a doctor's surgery, a public roof space and cafe, as well as 21 affordable apartments.

Hattersley provided a range of balancing valves including DPCV, public health and general valves.

S Shand-Brown

021219

Butterfly Valves for Heating & Chilled Water Systems

Fig. 3870

	BODY		DISC			SHAFT	LINER / BODY SEAL		BODY STYLE		OPERATOR		RATING	
Figure Number	Size Range	Ductile Iron	Aluminium Bronze	Ductile Iron	Stainless Steel	Stainless Steel	EPDM	Nitrile	Semi Lugged	Fully Lugged	Lever	Gearbox	PN16	ANSI Class 125
2850L	50 - 200mm	✔	✔			✔	✔		✔		✔		✔	✔
2850G	50 - 600mm	✔	✔			✔	✔		✔			✔	✔	✔
2851L	50 - 200mm	✔	✔			✔		✔	✔		✔		✔	✔
2851G	50 - 600mm	✔	✔			✔		✔	✔			✔	✔	✔
2870ML	50 - 200mm	✔	✔			✔	✔			✔	✔		✔	
2870MG	50 - 600mm	✔	✔			✔	✔			✔		✔	✔	
2871ML	50 - 200mm	✔	✔			✔		✔		✔	✔		✔	
2871MG	50 - 600mm	✔	✔			✔		✔		✔		✔	✔	
2870AL	2 - 8"	✔	✔			✔	✔			✔	✔			✔
2870AG	2 - 24"	✔	✔			✔	✔			✔		✔		✔
2871AL	2 - 8"	✔	✔			✔		✔		✔	✔			✔
2871AG	2 - 24"	✔	✔			✔		✔		✔		✔		✔
3850L	50 - 200mm	✔		✔		✔	✔		✔		✔		✔	✔
3850G	150 - 600mm	✔		✔		✔	✔		✔			✔	✔	✔
3851L	50 - 200mm	✔		✔		✔		✔	✔		✔		✔	✔
3851G	150 - 600mm	✔		✔		✔		✔	✔			✔	✔	✔
3870ML	50 - 200mm	✔		✔		✔	✔			✔	✔		✔	
3870MG	150 - 600mm	✔		✔		✔	✔			✔		✔	✔	
3871ML	50 - 200mm	✔		✔		✔		✔		✔	✔		✔	
3871MG	150 - 600mm	✔		✔		✔		✔		✔		✔	✔	
3870AL	2 - 8"	✔		✔		✔	✔			✔	✔			✔
3870AG	6 - 24"	✔		✔		✔	✔			✔		✔		✔
3871AL	2 - 8"	✔		✔		✔		✔		✔	✔			✔
3871AG	6 - 24"	✔		✔		✔		✔		✔		✔		✔
4850L	50 - 200mm	✔			✔	✔	✔		✔		✔		✔	✔
4850G	150 - 600mm	✔			✔	✔	✔		✔			✔	✔	✔
4851L	50 - 200mm	✔			✔	✔		✔	✔		✔		✔	✔
4851G	150 - 600mm	✔			✔	✔		✔	✔			✔	✔	✔
4870ML	50 - 200mm	✔			✔	✔	✔			✔	✔		✔	
4870MG	150 - 600mm	✔			✔	✔	✔			✔		✔	✔	
4871ML	50 - 200mm	✔			✔	✔		✔		✔	✔		✔	
4871MG	150 - 600mm	✔			✔	✔		✔		✔		✔	✔	
4870AL	2 - 8"	✔			✔	✔	✔			✔	✔			✔
4870AG	6 - 24"	✔			✔	✔	✔			✔		✔		✔
4871AL	2 - 8"	✔			✔	✔		✔		✔	✔			✔
4871AG	6 - 24"	✔			✔	✔		✔		✔		✔		✔

† WRAS approved product

251021

Hattersley®

Technical Helpline UK: 0845 604 1790 MEA: +971 4 816 5800
Email UK: tech-enquiries@hattersley.com
MEA: mena-techenquiries@hattersley.com

Fig. 2850L / 2851L / 3850L / 3851L / 4850L / 4851L Semi-Lugged Wafer Pattern Lever Operated

FEATURES & BENEFITS

- Universal Pattern - Valves are suitable for use with flanges conforming to BS EN 1092-2 PN16 or ANSI B16.1 Class 125
- Valve to BS EN593
- Ductile Iron, Stainless Steel, and Aluminium Bronze Disc Options
- EPDM and Nitrile Seat Liner Options
- 420 Stainless Steel Shafts for superior strength

VALVE SELECTION

	EPDM Liner	Nitrile Liner
Aluminium Bronze Disc	2850L	2851L
Ductile Iron Disc	3850L	3851L
Stainless Steel Disc	4850L	4851L

MATERIAL SPECIFICATION

Part	Material
Body	Ductile Iron (EN-GJS-400-15)
Disc (2850L & 2851L)	Aluminium Bronze (ASTM B148 C95400)
Disc (3850L & 3851L)	Ductile Iron (EN-GJS-400-15) Epoxy coated
Disc (4850L & 4851L)	Stainless Steel 304 (ASTM A351 CF8)
Liner (2850L, 3850L, & 4850L)	EPDM
Liner (2851L, 3851L, & 4851L)	Nitrile Rubber
Shaft	Stainless Steel 420 (ASTM A276 420)
Taper Pin	Stainless Steel 431 (ASTM A276 431)
O-Ring	Nitrile Rubber
Bushing	PTFE
Lever & Screw	Malleable Iron ASTM Gr.32510
Stop Plate	Mild Steel (GB700 Q235) Chromium Plated

DIMENSIONAL DRAWINGS

DD

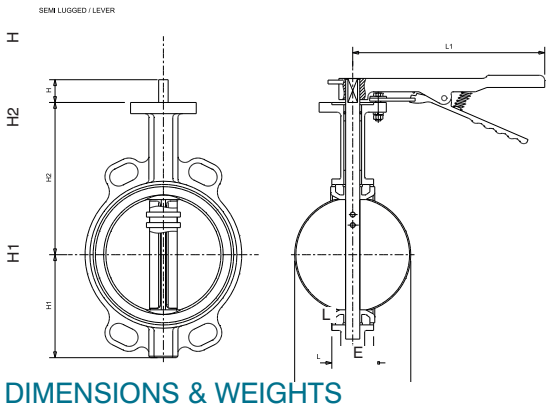

DIMENSIONS & WEIGHTS

Size	mm	50	65	80	100	125	150	200
H2	mm	141	153	161	179	193	204	247
H1	mm	61	72	87	106	123	137	174
L	mm	43	46	46	52	56	56	60
H	mm	32	32	32	32	32	32	45
L1	mm	216	216	216	265	265	265	374
ØE	mm	52.9	64.7	79.1	104.4	123.3	155.6	202.5
LEVER Wgt	kg	2.6	3.0	3.4	4.9	6.3	7.3	12.2
Kv		133	227	349	694	1181	1825	2503

PRESSURE/ TEMPERATURE RATING

PN16 & ANSI Class 125
-10 to 120°C (2850L / 3850L / 4850L)
-10 to 82°C (2851L / 3851L / 4851L)

TEST PRESSURES: (Hydrostatic)
SHELL: 24bar; Seat: 17.6 bar

SPECIFICATION

End connections compatible with BS EN1092-2 PN16 & ANSI B16.1 Class 125 flanges.

END CONNECTION: Semi-Lugged
OPERATOR: Trigger Lever
OTHER: Bare shaft options available (Fig No. 2850B / 2851B 3850B /3851B / 4850B / 4851B)

Please contact us for bare shaft top works details

110723

Every effort has been made to ensure that the information contained in this publication is accurate at the time of publishing. Hattersley Ltd assumes no responsibility or liability for typographical errors or omissions or for any misinterpretation of the information within the publication and reserves the right to change without notice.

Fig. 2850G / 2851G / 3850G / 3851G / 4850G / 4851G Semi-Lugged Wafer Pattern Gearbox Operated

FEATURES & BENEFITS

- Universal Pattern - Valves are suitable for use with flanges conforming to BS EN 1092-2 PN16 or ANSI B16.1 Class 125
- Valve to BS EN593
- Ductile Iron, Stainless Steel, and Aluminium Bronze Disc Options
- EPDM and Nitrile Seat Liner Options
- 420 Stainless Steel Shafts for superior strength

VALVE SELECTION

	EPDM Liner	Nitrile Liner
Aluminium Bronze Disc	2850G	2851G
Ductile Iron Disc	3850G	3851G
Stainless Steel Disc	4850G	4851G

MATERIAL SPECIFICATION

Part	Material
Body	Ductile Iron (EN-GJS-400-15)
Disc (2850G & 2851G) (DN50-600)	Aluminium Bronze (ASTM B148 C95400)
Disc (3850G & 3851G) (DN150-600)	Ductile Iron (EN-GJS-400-15) Epoxy coated
Disc (4850G & 4851G) (DN150-600)	Stainless Steel 304 (ASTM A351 CF8)
Liner (2850G, 3850G & 4850G)	EPDM
Liner (2851G, 3851G & 4851G)	Nitrile Rubber
Shaft	Stainless Steel 420 (ASTM A276 420)
Taper Pin	Stainless Steel 431 (ASTM A276 431)
O-Ring	Nitrile Rubber
Bushing	PTFE

DIMENSIONAL DRAWINGS

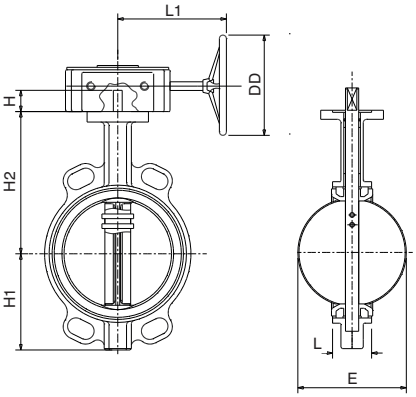

PRESSURE/ TEMPERATURE RATING

PN16 & ANSI Class 125
-10 to 120°C (3850G / 4850G)
-10 to 82°C (3851G / 4851G)

TEST PRESSURES: (Hydrostatic)
SHELL: 24bar; Seat: 17.6 bar

SPECIFICATION

End connections compatible with BS EN1092-2 PN16 & ANSI B16.1 Class 125 flanges.

END CONNECTION: Semi-Lugged
OPERATOR: Gearbox
OTHER: Bare shaft options available (Fig No. 2850B / 2851B 3850B /3851B / 4850B / 4851B)

Please contact us for bare shaft top works details

DIMENSIONS & WEIGHTS

Size	mm	50	65	80	100	125	150	200	250	300	350	400	450	500	600
H2	mm	141	153	161	179	193	204	247	280	324	310	340	375	425	505
H1	mm	61	72	87	106	123	137	174	209	253	255	317.5	330	367	443
L	mm	43	46	46	52	56	56	60	68	78	78	102	114	127	154
H	mm	32	32	32	32	32	32	45	45	45	48	64	64	64	82
L1	mm	157	157	157	157	157	157	236	236	237	237	246	246	254	301
ØE	mm	52.9	64.7	79.1	104.4	123.3	155.6	202.5	250.5	301.6	333.6	389.5	440.5	489.7	592.7
DD	mm	145	145	145	145	145	145	300	300	300	300	300	380	285	400
Bareshaft Wgt	kg	2.1	2.5	2.9	4.2	5.6	6.6	11.3	17.3	24.7	37.0	57.0	75.0	104.0	157.0
Gearbox Wgt	kg	7.0	7.4	7.8	9.1	10.5	11.5	20.1	26.0	36.0	48.0	82.0	100.0	134.0	207.0
Kv		133	227	349	694	1181	1825	2503	3876	6736	8135	12041	14121	18449	24125

Every effort has been made to ensure that the information contained in this publication is accurate at the time of publishing. Hattersley Ltd assumes no responsibility or liability for typographical errors or omissions or for any misinterpretation of the information within the publication and reserves the right to change without notice.

110723

Hattersley®
Technical Helpline UK: 0845 604 1790 MEA: +971 4 816 5800
Email UK: tech-enquiries@hattersley.com
MEA: mena-techenquiries@hattersley.com

Fig. 2870ML / 2871ML / 3870ML / 3871ML / 4870ML / 4871ML Fully Lugged Lever Operated Butterfly Valves

FEATURES & BENEFITS

- Valves are suitable for use with flanges conforming to BS EN 1092-2 PN16
- Valve to BS EN593
- Ductile Iron, Stainless Steel, and Aluminium Bronze Disc Options
- EPDM and Nitrile Seat Liner Options
- 420 Stainless Steel Shafts for superior strength

VALVE SELECTION

	EPDM Liner	Nitrile Liner
Aluminium Bronze Disc	2870ML	2871ML
Ductile Iron Disc	3870ML	3871ML
Stainless Steel Disc	4870ML	4871ML

MATERIAL SPECIFICATION

Part	Material
Body	Ductile Iron (EN-G35-400-15)
Disc (2870ML & 2871ML)	Aluminium Bronze (ASTM B148 C95400)
Disc (3870ML & 3871ML)	Ductile Iron (EN-G35-400-15) Epoxy coated
Disc (4870ML & 4871ML)	Stainless Steel 304 (ASTM A351 CF8)
Liner (2870ML, 3870ML & 4870ML)	EPDM
Liner (2871ML, 3871ML & 4871ML)	Nitrile rubber
Shaft	Stainless Steel 420 (ASTM A276 420)
Taper Pin	Stainless Steel 431 (ASTM A276 431)
O-Ring	Nitrile rubber
Bushing	PTFE
Lever & Screw	Malleable Iron ASTM Gr.32510
Stop Plate	Mild Steel (GB700 Q235) Chromium Plated

DIMENSIONAL DRAWINGS

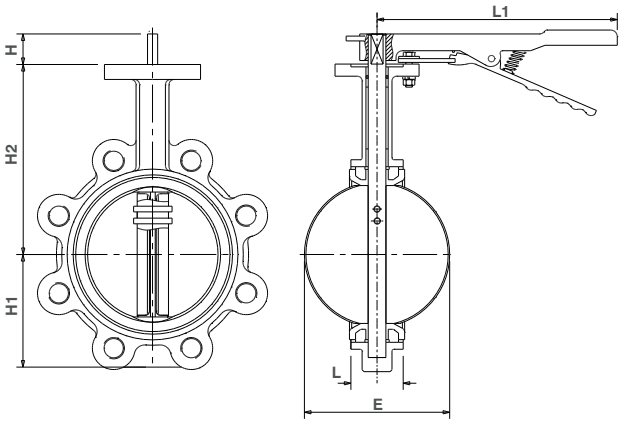

DIMENSIONS & WEIGHTS

Size	mm	50	65	80	100	125	150	200
H2	mm	141	153	161	179	193	204	247
H1	mm	61	72	87	106	123	137	174
L	mm	43	46	46	52	56	56	60
H	mm	32	32	32	32	32	32	45
L1	mm	216	216	216	265	265	265	374
ØE	mm	52.9	64.7	79.1	104.4	123.3	155.6	202.5
LEVER Wgt	kg	3.5	3.9	5.2	7.3	9.8	10.7	18.3
Kv		133	227	349	694	1181	1825	2503

PRESSURE/ TEMPERATURE RATING

PN16
-10 to 120°C (2870ML / 3870ML / 4870ML)
-10 to 82°C (2871ML / 3871ML / 4871ML)

TEST PRESSURES: (Hydrostatic)
SHELL: 24bar; Seat: 17.6 bar

SPECIFICATION

End connections compatible with BS EN1092-2 PN16 flanges.

END CONNECTION: Fully Lugged
OPERATOR: Trigger Lever
OTHER: Bare shaft options available (Fig No. 2870MB / 2871MB / 3870MB / 3871MB / 4870MB / 4871MB)

Please contact us for bare shaft top works details

110723

Every effort has been made to ensure that the information contained in this publication is accurate at the time of publishing. Hattersley Ltd assumes no responsibility or liability for typographical errors or omissions or for any misinterpretation of the information within the publication and reserves the right to change without notice.

Fig. 2870MG / 2871MG / 3870MG / 3871MG / 4870MG / 4871MG Fully Lugged Gearbox Operated

FEATURES & BENEFITS

- Valves are suitable for use with flanges conforming to BS EN 1092-2 PN16
- Valve to BS EN593
- Ductile Iron, Stainless Steel, and Aluminium Bronze Disc Options
- EPDM and Nitrile Seat Liner Options
- 420 Stainless Steel Shafts for superior strength

VALVE SELECTION

	EPDM Liner	Nitrile Liner
Aluminium Bronze Disc	2870MG	2871MG
Ductile Iron Disc	3870MG	3871MG
Stainless Steel Disc	4870MG	4871MG

MATERIAL SPECIFICATION

Part	Material
Body	Ductile Iron (EN-GJS-400-15)
Disc (2870MG & 2871MG) (DN50-600)	Aluminium Bronze (ASTM B148 C95400)
Disc (3870MG & 3871MG) (DN150-600)	Ductile Iron (EN-GJS-400-15) Epoxy coated
Disc (4870MG & 4871MG) (DN150-600)	Stainless Steel 304 (ASTM A351 CF8)
Liner (2870MG, 3870MG, & 4870MG)	EPDM
Liner (2871MG, 3871MG, & 4871MG)	Nitrile Rubber
Shaft	Stainless Steel 420 (ASTM A276 420)
Taper Pin	Stainless Steel 431 (ASTM A276 431)
O-Ring	Nitrile Rubber
Bushing	PTFE

DIMENSIONAL DRAWINGS

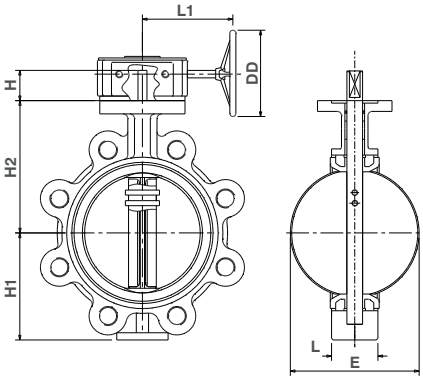

PRESSURE/ TEMPERATURE RATING

PN16
-10 to 120°C (2870MG / 3870MG / 4870MG)
-10 to 82°C (2871MG / 3871MG / 4871MG)

TEST PRESSURES: (Hydrostatic)
SHELL: 24bar; Seat: 17.6 bar

SPECIFICATION

End connections compatible with BS EN1092-2 PN16 flanges.

END CONNECTION: Fully Lugged
OPERATOR: Gearbox
OTHER: Bare shaft options available (Fig No. 2870MB / 2871MB / 3870MB / 3871MB / 4870MB / 4871MB)
Please contact us for bare shaft top works details

DIMENSIONS & WEIGHTS

Size	mm	50	65	80	100	125	150	200	250	300	350	400	450	500	600
H2	mm	141	153	161	179	193	204	247	280	324	310	340	375	425	505
H1	mm	61	72	87	106	123	137	174	209	253	260	317.5	330	367	443
L	mm	43	46	46	52	56	56	60	68	78	78	102	114	127	154
H	mm	32	32	32	32	32	32	45	45	45	48	64	64	64	82
L1	mm	157	157	157	157	157	157	236	236	237	237	246	246	254	301
ØE	mm	52.9	64.7	79.1	104.4	123.3	155.6	202.5	250.5	301.6	333.6	389.5	440.5	489.7	592.7
DD	mm	145	145	145	145	145	145	300	300	300	300	300	380	285	400
Bareshaft Wgt	kg	3.0	3.4	4.7	6.6	9.1	10.0	17.4	25.0	34.0	52.0	81.0	106.0	140.0	220.0
Gearbox Wgt	kg	7.9	8.3	9.6	11.5	14.0	14.9	26.2	34.0	46.0	63.0	106.0	131.0	170.0	270.0
Kv		133	227	349	694	1181	1825	2503	3876	6736	8135	12041	14121	18449	24125

Every effort has been made to ensure that the information contained in this publication is accurate at the time of publishing. Hattersley Ltd assumes no responsibility or liability for typographical errors or omissions or for any misinterpretation of the information within the publication and reserves the right to change without notice.

030823

Hattersley®
Technical Helpline UK: 0845 604 1790 MEA: +971 4 816 5800
Email UK: tech-enquiries@hattersley.com
MEA: mena-techenquiries@hattersley.com

Fig. 2870AL / 2871AL / 3870AL / 3871AL / 4870AL / 4871AL Fully Lugged Lever Operated

FEATURES & BENEFITS

- Valves are suitable for use with flanges conforming to ANSI B16.1 Class 125
- Valve generally conforms to MSS SP 67
- Ductile Iron, Stainless Steel, and Aluminium Bronze Disc Options
- EPDM and Nitrile Seat Liner Options
- 420 Stainless Steel Shafts for superior strength

VALVE SELECTION

	EPDM Liner	Nitrile Liner
Aluminium Bronze Disc	2870AL	2871AL
Ductile Iron Disc	3870AL	3871AL
Stainless Steel Disc	4870AL	4871AL

MATERIAL SPECIFICATION

Part	Material
Body	Ductile Iron (EN-G35-400-15)
Disc (2870AL & 2871AL)	Aluminium Bronze (ASTM B148 C95400)
Disc (3870AL & 3871AL)	Ductile Iron (EN-G35-400-15) Epoxy coated
Disc (4870AL & 4871AL)	Stainless Steel 304 (ASTM A351 CF8)
Liner (2870AL, 3870AL & 4870AL)	EPDM
Liner (2871AL, 3871AL & 4871AL)	Nitrile rubber
Shaft	Stainless Steel 420 (ASTM A276 420)
Taper Pin	Stainless Steel 431 (ASTM A276 431)
O-Ring	Nitrile rubber
Bushing	PTFE
Lever & Screw	Malleable Iron ASTM Gr.32510
Stop Plate	Mild Steel (GB700 Q235) Chromium Plated

DIMENSIONAL DRAWINGS

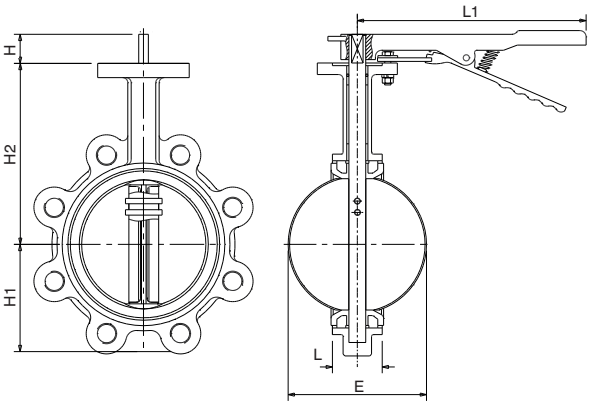

DIMENSIONS & WEIGHTS

Size	mm	50	65	80	100	125	150	200
H2	mm	141	153	161	179	193	204	247
H1	mm	61	72	87	106	123	137	174
L	mm	43	46	46	52	56	56	60
H	mm	32	32	32	32	32	32	45
L1	mm	216	216	216	265	265	265	374
ØE	mm	52.9	64.7	79.1	104.4	123.3	155.6	202.5
LEVER Wgt	kg	3.5	3.9	5.2	7.3	9.8	10.7	18.3
Kv		133	227	349	694	1181	1825	2503

PRESSURE/ TEMPERATURE RATING

ANSI 125
-10 to 120°C (2870AL / 3870AL / 4870AL)
-10 to 82°C (2871AL / 3871AL / 4871AL)

TEST PRESSURES: (Hydrostatic)
SHELL: 24bar; Seat: 17.6 bar

SPECIFICATION

End connections compatible with ANSI B16.1 Class 125 flanges.

END CONNECTION: Fully Lugged
OPERATOR: Trigger Lever
OTHER: Bare shaft options available (Fig No. 2870AB / 2871AB / 3870AB / 3871AB / 4870AB / 4871AB)

Please contact us for bare shaft top works details

110121

Every effort has been made to ensure that the information contained in this publication is accurate at the time of publishing. Hattersley Ltd assumes no responsibility or liability for typographical errors or omissions or for any misinterpretation of the information within the publication and reserves the right to change without notice.

Fig. 2870AG / 2871AG / 3870AG / 3871AG / 4870AG / 4871AG Fully Lugged Gearbox Operated

FEATURES & BENEFITS

- Valves are suitable for use with flanges conforming to ANSI B16.1 Class 125
- Valve generally conforms to MSS SP 67
- Ductile Iron, Stainless Steel, and Aluminium Bronze Disc Options
- EPDM and Nitrile Seat Liner Options
- 420 Stainless Steel Shafts for superior strength

VALVE SELECTION

	EPDM Liner	Nitrile Liner
Aluminium Bronze Disc	2870AG	2871AG
Ductile Iron Disc	3870AG	3871AG
Stainless Steel Disc	4870AG	4871AG

MATERIAL SPECIFICATION

Part	Material
Body	Ductile Iron (EN GJS-400-15)
Disc (2870AG & 2871AG) (2" - 24")	Aluminium Bronze (ASTM B148 C95400)
Disc (3870AG & 3871AG) (6" - 24")	Ductile Iron (EN GJS-400-15) Epoxy coated
Disc (4870AG & 4871AG) (6" - 24")	Stainless Steel 304 (ASTM A351 CF8)
Liner (2870AG, 3870AG & 4870AG)	EPDM
Liner (2871AG, 3871AG & 4871AG)	Nitrile Rubber
Shaft	Stainless Steel 420 (ASTM A276 420)
Taper Pin	Stainless Steel 431 (ASTM A276 431)
O-Ring	Nitrile Rubber
Bushing	PTFE

DIMENSIONAL DRAWINGS

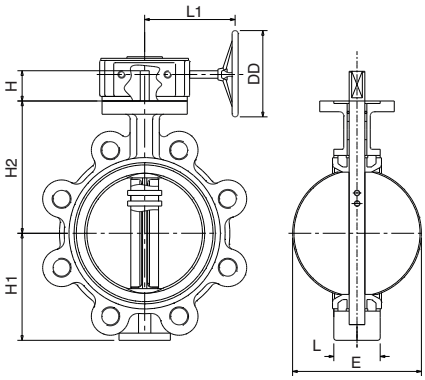

PRESSURE/ TEMPERATURE RATING

ANSI 125
-10 to 120°C (2870AG, 3870AG & 4870AG)
-10 to 82°C (2871AG, 3871AG, & 4871AG)

TEST PRESSURES: (Hydrostatic)
SHELL: 24bar; Seat: 17.6 bar

SPECIFICATION

End connections compatible with ANSI B16.1 Class 125 flanges.

END CONNECTION: Fully Lugged
OPERATOR: Gearbox
OTHER: Bare shaft options available (Fig No. 2870AB / 2871AB / 3870AB / 3871AB / 4870AB / 4871AB)

Please contact us for bare shaft top works details

DIMENSIONS & WEIGHTS

Size	mm	50	65	80	100	125	150	200	250	300	350	400	450	500	600
H2	mm	141	153	161	179	193	204	247	280	324	310	340	375	425	505
H1	mm	61	72	87	106	123	137	174	209	253	260	317.5	330	367	443
L	mm	43	46	46	52	56	56	60	68	78	78	102	114	127	154
H	mm	32	32	32	32	32	32	45	45	45	48	64	64	64	82
L1	mm	157	157	157	157	157	157	236	236	237	237	246	246	254	301
ØE	mm	52.9	64.7	79.1	104.4	123.3	155.6	202.5	250.5	301.6	333.6	389.5	440.5	489.7	592.7
DD	mm	145	145	145	145	145	145	300	300	300	300	300	380	285	400
Bareshaft Wgt	kg	3.0	3.4	4.7	6.6	9.1	10.0	17.4	25.0	34.0	52.0	81.0	106.0	140.0	220.0
Gearbox Wgt	kg	7.9	8.3	9.6	11.5	14.0	14.9	26.2	34.0	46.0	63.0	106.0	131.0	170.0	270.0
Kv		133	227	349	694	1181	1825	2503	3876	6736	8135	12041	14121	18449	24125

Every effort has been made to ensure that the information contained in this publication is accurate at the time of publishing. Hattersley Ltd assumes no responsibility or liability for typographical errors or omissions or for any misinterpretation of the information within the publication and reserves the right to change without notice.

110121

Hattersley®
Technical Helpline UK: 0845 604 1790 MEA: +971 4 816 5800
Email UK: tech-enquiries@hattersley.com
MEA: mena-techenquiries@hattersley.com

Fig. 3873MG
Fully Lugged Gearbox Operated Butterfly Double Regulating Valves

FEATURES & BENEFITS

- Valves are suitable for use with flanges conforming to BS EN 1092-2 PN16
- Valve to BS EN593
- Double Regulating Valves consist of a fully lugged, EPDM liner butterfly valve with a Double Regulating feature, which allows the valve to be used for isolation and to be reopened to its pre-set position to maintain required flow rate
- Ductile Iron, Disc
- 420 Stainless Steel Shafts for superior strength

MATERIAL SPECIFICATION

Part	Material
Body	Ductile Iron (EN GJS-400-15)
Disc 3873MG	Ductile Iron (EN-G35-400-15) Epoxy coated
Liner	EPDM
Shaft	Stainless Steel 420 (ASTM A276 420)
Taper Pin	Stainless Steel 431 (ASTM A276 431)
O-Ring	Nitrile Rubber
Bushing	PTFE

DIMENSIONAL DRAWINGS

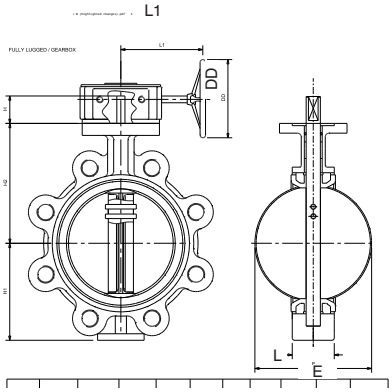

PRESSURE/ TEMPERATURE RATING

PN16
-10 to 120°C

TEST PRESSURES: (Hydrostatic)
SHELL: 24bar; Seat: 17.6 bar

SPECIFICATION

End connections compatible with BS EN1092-2 PN16 flanges.

END CONNECTION:
Fully Lugged
OPERATOR:
Gearbox

DIMENSIONS & WEIGHTS

Size	mm	150	200	250	300	350	400	450	500	600
H2	mm	204	247	280	324	310	340	375	425	505
H1	mm	137	174	209	253	260	317.5	330	367	443
L	mm	56	60	68	78	78	102	114	127	154
H	mm	32	45	45	45	48	64	64	64	82
L1	mm	157	236	236	237	237	246	246	254	301
ØE	mm	155.6	202.5	250.5	301.6	333.6	389.5	440.5	489.7	592.7
DD	mm	145	300	300	300	300	300	380	285	400
Bareshaft Wgt	kg	10.0	17.4	25.0	34.0	52.0	81.0	106.0	140.0	220.0
Gearbox Wgt	kg	14.9	26.2	34.0	46.0	63.0	106.0	131.0	170.0	270.0
Kv		1825	2503	3876	6736	8135	12041	14121	18449	24125

010420

Every effort has been made to ensure that the information contained in this publication is accurate at the time of publishing. Hattersley Ltd assumes no responsibility or liability for typographical errors or omissions or for any misinterpretation of the information within the publication and reserves the right to change without notice.

Check Valves

Fig. 47

Check valves permit flow in one direction only, and close automatically if flow reverses. They are entirely automatic in action, depending upon pressure and velocity of flow within the line to perform their functions of opening and closing. Most Hattersley swing check valves can be installed in horizontal or vertical upward flow piping. Lift check valves must be used in horizontal lines only.

Hattersley offers four basic types of bronze check valves, namely:

- Horizontal lift check
- Vertical lift check
- Swing check
- Double check

Swing check valves are suitable for velocities up to 3 metres/second when installed with 6 diameters of straight pipe upstream and 3 diameters downstream. If the valve is situated such that turbulent flow enters the valve, the velocity should not exceed 2 metres/second.

Horizontal lift check valves are primarily used for air, gas and steam services whilst swing check valves are most suitable for water and other liquids.

For air, gas and low pressure applications, especially where bubble tight closure is required, a valve with rubber faced disc is necessary.

Compressed air service requires a horizontal lift check valve with a nitrile rubber facing on the disc and fitted with a recoil spring. The valve should always be installed as far away from the compressor as possible.

When selecting valves, reference to codes of practice and other mandatory specifications should be made which may preclude certain types for specific applications.

Double check valves are designed to prevent contamination of water caused by back syphonage, back flow and cross connection in supplies such as those to hose taps, cisterns, stand pipes, showers and basins.

Valves, where designated, are WRAS Approved Products and listed in the Water Fittings and Materials Directory.

Fig. No.	PN / ANSI Rating	End Connection	Size Range	Disc / Cartridge Material	Body Material	Lift Type
42	32	Threaded	1/2 - 2"	Bronze	Bronze	Horizontal Lift
1013	32	Threaded	1/2 - 2"	PTFE	Bronze	Horizontal Lift
47	25	Threaded	1/4 - 3"	Brass (1/4 - 1") Bronze (1 1/4 - 3")	Bronze	Swing
3047	25	Threaded	1/2 - 2"	Nitrile	Bronze	Swing
3047W*	25	Threaded	3/4 - 2"	Nitrile	Bronze	Swing
250W*	16	Threaded	1/2 - 2"	Acetal	DZR Brass	In Line Double Check
250CW*	16	Compression	15 - 28mm	Acetal	DZR Brass Nickle Plated	In Line Double Check
160W*	16	Flanged	50 -300mm	Cast Iron + EPDM	Cast Iron	In Line Single Check
260W	16	Flanged	50 -300mm	Cast Iron + EPDM	Cast Iron	In Line Double Check
M650	25	Flanged	50 - 300mm	Ductile Iron	Ductile Iron	Swing
M651	16	Flanged	50 - 300mm	Cast Iron	Cast Iron	Swing
651ANSI	Class 125	Flanged	2 - 12"	Cast Iron	Cast Iron	Swing
M653	16	Flanged	50 - 300mm	Cast Iron	Cast Iron	Swing + Lever & Weight
653ANSI	Class 125	Flanged	2 - 12"	Cast Iron	Cast Iron	Swing + Lever & Weight
861	16	Wafer	50 - 600mm	Stainless Steel	Cast Iron (50-150mm) Ductile Iron (200 - 600mm)	In Line Double Door
816A	Class 125	Wafer	2 - 24"	Stainless Steel	Cast Iron (50-150mm) Ductile Iron (200 - 600mm)	In Line Double Door
866	25	Wafer	50 - 600mm	Stainless Steel	Ductile Iron	In Line Double Door

* WRAS approved product

110121

Hattersley®

Technical Helpline UK: 0845 604 1790 MEA: +971 4 816 5800
Email UK: tech-enquiries@hattersley.com
MEA: mena-techenquiries@hattersley.com

Fig. 42
Bronze - Horizontal Lift Pattern

NRV

FEATURES & BENEFITS

- Robust and high quality bronze body
- Horizontal lift pattern
- Metal to metal seat for enhance sealing
- Taper threaded to BS EN 10226 ISO 7-1 (BS 21)

MATERIAL SPECIFICATION

Component	Material	Specification	
		BS EN	ASTM
Cap	Bronze	1982 CC491K	B62 C83600
Disc (1/2" - 1")	Bronze	1982 CC491K	B62 C83600
Body	Bronze	1982 CC491K	B62 C83600

Fits in horizontal pipework only, not vertical.

DIMENSIONAL DRAWING

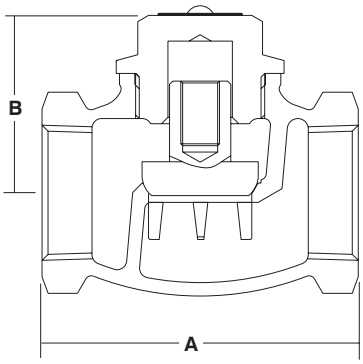

DIMENSIONS & WEIGHTS

Nom Size	in	1/2	3/4	1	1 1/4	1 1/2	2
A	mm	60	74	86	99	109	130
B	mm	39	43	51	58	64	70
Weight	kg	0.5	0.7	1.6	1.7	2.5	3.5

PRESSURE/ TEMPERATURE RATING

Fig. 42: BS 5154 PN32 Series B
32 bar from -10 to 100ºC
14 bar at 198ºC

Fig. 42AT: MSS SP-80 Class 150
20.7 Bar / 66°C
10.3 Bar / 208°C

TEST PRESSURES

Shell: 6 bar (pneumatic)
Seat: 35.2 bar (hydraulic)

SPECIFICATION

BS 5154:1991.
Bronze body.
Horizontal lift pattern.
Metal to metal seat.
Guilded disc.
Threaded cap.
Taper threaded to BS EN 10226 ISO 7-1 (BS 21).
Available taper threaded NPT to ASTM B1.20.1 (42AT).
Medium: Group 2 Gas, Group 2 Liquids

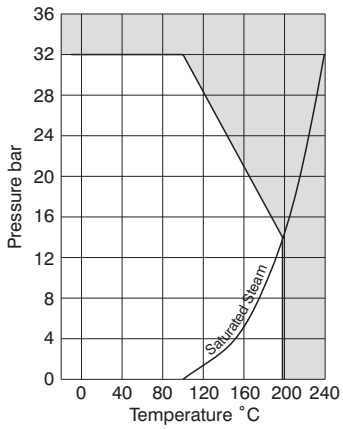

110121

Every effort has been made to ensure that the information contained in this publication is accurate at the time of publishing. Hattersley Ltd assumes no responsibility or liability for typographical errors or omissions or for any misinterpretation of the information within the publication and reserves the right to change without notice.

Fig. 44
Bronze - Swing Pattern

NRV

FEATURES & BENEFITS

- Horizontal swing pattern
- Robust and high quality bronze body
- Metal to metal seat
- Check valves permit flow in one direction only and close automatically if flow reverses.

MATERIAL SPECIFICATION

Component	Material	Size	Specification	
			BS EN	ASTM
Cap	Bronze	All	1982 CC491K	B62 C83600
Hinge Pin	Stainless Steel	1/2" - 2"	BS970 GR316S11	-
Disc Nut	Brass	All	12164 CW614N	B455 C38500
Body	Bronze	All	1982 CC491K	B62 C83600
Hinge	Bronze	All	1982 CC491K	B62 C83600
Disc	Brass	1/2" - 1"	12164 CW614N	B455 C38500
Disc	Bronze	1 1/4" - 2"	1982 CC491K	B62 C83600

DIMENSIONAL DRAWING

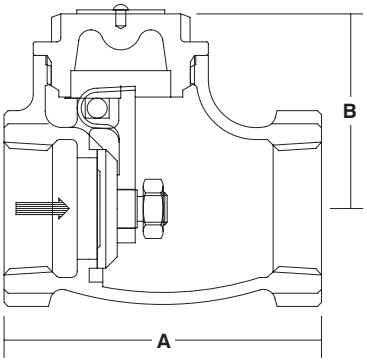

PRESSURE/ TEMPERATURE RATING

Fig. 44: BS5154 PN20 Series B
9 Bar at 180°C
20 bar -10°C to 180°C

TEST PRESSURES

Shell: 6 bar (pneumatic)
Seat: 22 bar (hydraulic)

SPECIFICATION

Bronze Check Valve, metal seated, with body and cap to BSEN1982 CC491K, SS 316 hinge pin, PN20 rating in accordance with BS5154.

Fig. 44 is taper threaded to BS EN 10226 ISO 7-1 (BS 21).

Fig. 44.AT is ANSI threaded to B1.20.1 (Taper).

The valve is suitable for use on Group 1 & 2 Liquids and Group 2 Gas, as defined by the Pressure Equipment Directive 2014/68/EU.

DIMENSIONS & WEIGHTS

Nom Size	in	1/2	3/4	1	1 1/4	1 1/2	2
A	mm	59	68	82	95	98	111
B	mm	38	42	49	56	65	76
Weight	kg	0.30	0.40	0.59	0.86	1.15	1.78
Kv		8.53	15.55	26.27	46.49	64.77	112.24

Every effort has been made to ensure that the information contained in this publication is accurate at the time of publishing. Hattersley Ltd assumes no responsibility or liability for typographical errors or omissions or for any misinterpretation of the information within the publication and reserves the right to change without notice.

03/02/21

Hattersley®
Technical Helpline UK: 0845 604 1790 MEA: +971 4 816 5800
Email UK: tech-enquiries@hattersley.com
MEA: mena-techenquiries@hattersley.com

Fig. 1013
Bronze - Horizontal Lift Pattern

NRV

FEATURES & BENEFITS

- Robust and high quality bronze body
- Horizontal lift pattern
- Taper threaded to BS EN 10226 ISO 7-1 (BS 21)

MATERIAL SPECIFICATION

Component	Material	Specification	
		BS EN	ASTM
Cap (1/2" to 1")	Brass	12164 CW603N	B16 C36000
Cap (1 1/4" to 2")	Bronze	1982 CC491K	B62 C83600
Disc Holder	Bronze	1982 CC491K	B62 C83600
Disc	PTFE - Glass Filled	-	
Body	Bronze	1982 CC491K	B62 C83600

DIMENSIONAL DRAWING

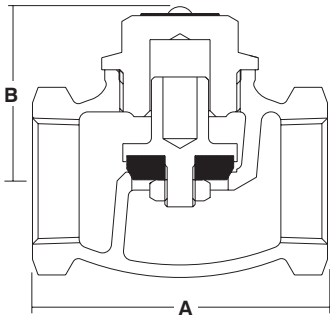

DIMENSIONS & WEIGHTS

Nom Size	in	1/2	3/4	1	1 1/4	1 1/2	2
A	mm	60	74	86	99	109	130
B	mm	39	43	51	58	64	70
Weight	kg	0.4	0.6	1.1	1.3	2.1	3.4

PRESSURE/ TEMPERATURE RATING

BS 5154 PN32 Series B
32 bar from -10 to 100ºC
14 bar at 198ºC

TEST PRESSURES

Shell: 6 bar - pneumatic
Seat: 35.2 bar - hydraulic

SPECIFICATION

BS 5154:1991.
Bronze body.
Horizontal lift pattern.
Guilded disc.
Threaded cap.
Taper threaded BS EN 10266 (ISO 7-1) formerly BS 21.
Medium: Group 2 Gas, Group 2 Liquids

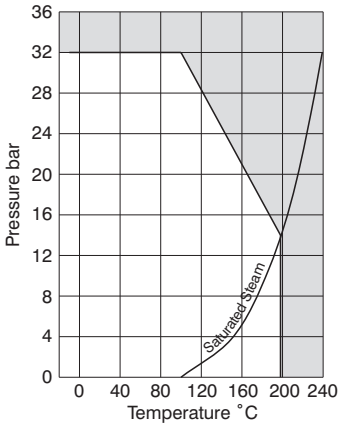

Every effort has been made to ensure that the information contained in this publication is accurate at the time of publishing. Hattersley Ltd assumes no responsibility or liability for typographical errors or omissions or for any misinterpretation of the information within the publication and reserves the right to change without notice.

Technical Helpline UK: 0845 604 1790 MEA: +971 4 816 5800
Email UK: tech-enquiries@hattersley.com
MEA: mena-techenquiries@hattersley.com

Fig. 47
Bronze - Swing Pattern

NRV

FEATURES & BENEFITS

- Horizontal swing pattern
- Robust and high quality bronze body
- Metal to metal seat for enhance sealing
- Fig. 47 is taper threaded to BS EN 10226 ISO 7-1 (BS 21)
- Fig. 47.AT is ANSI threaded to B1.20.1 (Taper)

MATERIAL SPECIFICATION

Component	Material	Size	Specification	
			BS EN	ASTM
Cap	Bronze	All	1982 CC491K	B62 C83600
Hinge Pin	Stainless Steel	1/4" - 2"	BS970 GR316S11	-
Hinge Pin	Brass	2 1/2" - 3"	12164 CW614N	-
Disc Nut	Brass	All	12164 CW614N	B455 C38500
Body	Bronze	All	1982 CC491K	B62 C83600
Hinge	Bronze	1/4"- 3/8" / 2½"- 3"	1982 CC491K	B62 C83600
Hinge	Brass	½" - 2"	12164 CW617N	-
Disc C38500	Brass	1/4"- 1" / 2½"- 3"	12164 CW614N	B455
Disc	Brass	1 1/4" - 2"	12164 CW617N	-
Disc	Bronze	1 1/4" - 3"	1982 CC491K	B62 C83600

DIMENSIONAL DRAWING

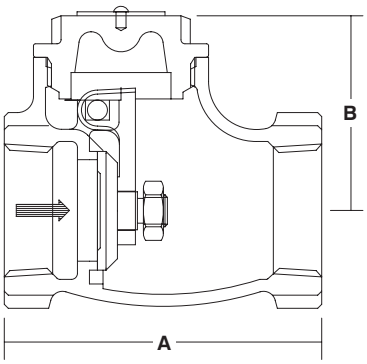

PRESSURE/ TEMPERATURE RATING

Fig. 47: BS 5154 PN25 Series B
25 bar from -10 to 100ºC
10.5 bar at 186ºC

Fig. 47AT: MSS SP-80 Class 150
20.7 Bar / 66°C
10.3 Bar / 208°C

TEST PRESSURES

Shell: 6 bar (pneumatic)
Seat: 27.5 bar (hydraulic)

SPECIFICATION

BS 5154:1991.
Bronze body.
Horizontal swing pattern.
Threaded cover.
Fig. 47 is taper threaded to BS EN 10226 ISO 7-1 (BS 21).
Fig. 47.AT is ANSI threaded to B1.20.1 (Taper)
Medium: Group 2 Liquids

DIMENSIONS & WEIGHTS

Nom Size	in	1/4	3/8	1/2	3/4	1	1 1/4	1 1/2	2	2 1/2	3
A	mm	48	48	58	66	80	89	95	108	155	190
B	mm	33	33	38	42	49	56	65	76	98	99
Weight	kg	0.20	0.19	0.32	0.43	0.61	1.01	1.34	2.12	4.08	5.76

Every effort has been made to ensure that the information contained in this publication is accurate at the time of publishing. Hattersley Ltd assumes no responsibility or liability for typographical errors or omissions or for any misinterpretation of the information within the publication and reserves the right to change without notice.

200923

Hattersley®
Technical Helpline UK: 0845 604 1790 MEA: +971 4 816 5800
Email UK: tech-enquiries@hattersley.com
MEA: mena-techenquiries@hattersley.com

Fig. 3047
Bronze - Swing Pattern

NRV

FEATURES & BENEFITS

- Horizontal swing pattern
- Robust and high quality bronze body
- Nitrile disc as standard with alternative materials available
- Taper threaded to BS EN 10226 ISO 7-1 (BS 21)

MATERIAL SPECIFICATION

Component	Material	Specification BS EN
Body	Bronze	1982 CC491K
Cap	Bronze	1982 CC491K
Disc Holder (1/2" to 1")	Brass	12164 CW614N
Disc Holder (1 1/4" to 2")	Brass	12164 CW617N
Disc Holder (2½" to 2")	Bronze	1982 CC491K
Disc	Nitrile	2751 BA80
Disc Retaining Nut	Brass	12164 CW614N
Disc Retaining Washer	Brass	12164 CW614N
Hinge	Brass	12164 CW617N
Hinge Pin	Stainless Steel	970 GR316S11
Hinge Nut	Brass	12164 CW614N
Identification Plate	Aluminium	-
Drive Screw	Steel Electro Brassed	-

DIMENSIONAL DRAWING

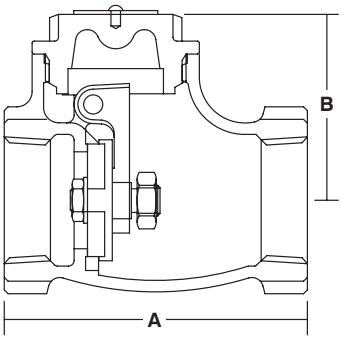

DIMENSIONS & WEIGHTS

Nom Size	in	1/2	3/4	1	1 1/4	1 1/2	2
A	mm	58	66	80	89	95	108
B	mm	38	42	49	56	65	76
Weight	kg	0.33	0.43	0.63	1.01	1.34	2.12

PRESSURE/ TEMPERATURE RATING

BS 5154:1991 PN25
25 bar from -10 to restricted 100ºC

TEST PRESSURES

Shell: 6 bar - pneumatic
Seat: 27.5 bar - hydraulic

SPECIFICATION

Horizontal swing pattern.
Threaded cover.
Nitrile disc as standard with alternative materials available.
Ends threaded internal BS EN 10266 (ISO 7).
Suitable for mounting in horizontal and vertical pipe (with vertical flow upwards).
Medium: Group 1 Liquids, Group 2 Liquids

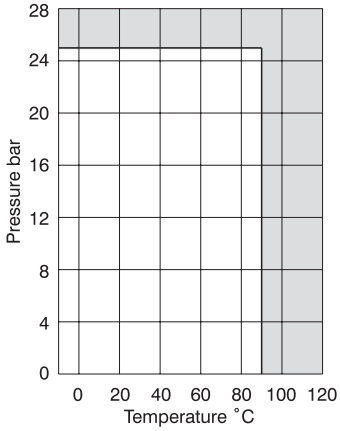

Every effort has been made to ensure that the information contained in this publication is accurate at the time of publishing. Hattersley Ltd assumes no responsibility or liability for typographical errors or omissions or for any misinterpretation of the information within the publication and reserves the right to change without notice.

200623

Fig. 3047W
Bronze - Swing Pattern

WRAS APPROVED PRODUCT

NRV

FEATURES & BENEFITS

- Horizontal swing pattern
- Robust and high quality bronze body
- Taper threaded to BS EN 10226 ISO 7-1 (BS 21)
- WRAS Approved to 85°C

MATERIAL SPECIFICATION

Component	Material	Specification BS EN
Body	Bronze	1982 CC491K
Cap	Bronze	1982 CC491K
Disc Holder (1/2" to 1")	Brass	12164 CW614N
Disc Holder (1 1/4" to 2")	Bronze	1982 CC491K
Disc	Nitrile	2751 BA80
Disc Retaining Nut	Brass	12164 CW614N
Disc Retaining Washer	Brass	12164 CW614N
Hinge	Bronze	1982 CC491K
Hinge Pin	Stainless Steel	970 GR316S11
Hinge Nut	Brass	12164 CW614N
Identification Plate	Aluminium	-
Drive Screw	Steel Electro Brassed	-

DIMENSIONAL DRAWING

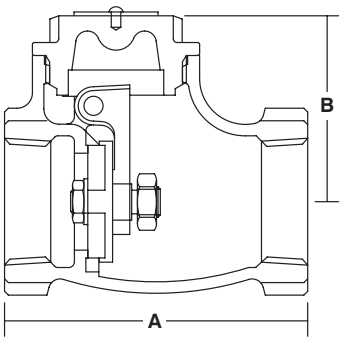

DIMENSIONS & WEIGHTS

Nom Size	in	3/4	1	1 1/4	1 1/2	2
A	mm	66	80	89	95	108
B	mm	42	49	56	65	76
Weight	kg	0.43	0.63	1.01	1.34	2.12

PRESSURE/ TEMPERATURE RATING

BS 5154:1991 PN25
25 bar from -10 to restricted 90ºC

TEST PRESSURES

Shell: 6 bar - pneumatic
Seat: 27.5 bar - hydraulic

SPECIFICATION

Horizontal swing pattern.
Threaded cover.
Ends threaded internal BS EN 10226.
Suitable for mounting in horizontal and vertical pipe (with vertical flow upwards).

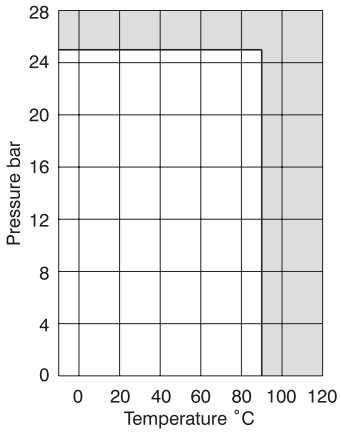

Every effort has been made to ensure that the information contained in this publication is accurate at the time of publishing. Hattersley Ltd assumes no responsibility or liability for typographical errors or omissions or for any misinterpretation of the information within the publication and reserves the right to change without notice.

110121

Hattersley®
Technical Helpline UK: 0845 604 1790 MEA: +971 4 816 5800
Email UK: tech-enquiries@hattersley.com
MEA: mena-techenquiries@hattersley.com

Fig.250W / Fig.250CW Double Check Valves

WRAS APPROVED PRODUCT

FEATURES & BENEFITS

- Double check valves are used to prevent the risk of backflow and back siphonage contamination in domestic dwellings, public and commercial buildings
- WRAS Approved for use with wholesome (potable) water to 85°C
- Compression version supplied with ends complying with BS EN 1252-2 for use with BS EN 1057 R250 (half hard) copper tube or female taper threads complying with BS EN 10226-2
- Shell pressure rating for Fig. 250W and Fig. 250CW is PN16 with a maximum inlet/working pressure of 10 bar
- Compliant with BS EN 13959 'Anti- pollution check valves' family E type D

MATERIAL SPECIFICATION

Component	Material	Specification BS EN
Body	DZR Brass	BS EN 12165 CW602N
Cartridge	Acetal	-
Vent Plug (threaded)	Brass	BS EN 12165 CW614N / 617N
Vent Plug (compression)	Nylon	-
'O' ring	NBR / EPDM	-
Retaining Clip	Stainless Steel	AISI 304
Compression Nut	Brass	BS EN 12165 CW602N
Compression Olive	Cartridge Brass	H62
Plating (compression)	Nickel Plated	-
Plating (Threaded)	Unplated	-

Fig.250W

PRESSURE/ TEMPERATURE RATING

Shell Pressure PN16
85°C maximum - WRAS Approved to 85°C

MAX INLET/WORKING PRESSURE

10 bar

WRAS APPROVED

16 bar

MIN OPENING PRESSURE

0.2 bar

END CONNECTIONS

Compression to BS EN 1252-2 and taper female threaded to BS EN 10226-2

APPLICATION

Water

PED

This valve is suitable for use on group 2 liquids only as defined by the Pressure Equipment Directive 2014/68/EU

DIMENSIONAL DRAWING

Compression

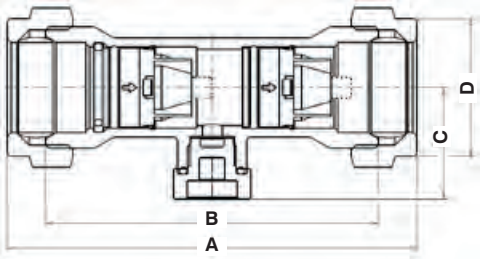

Threaded

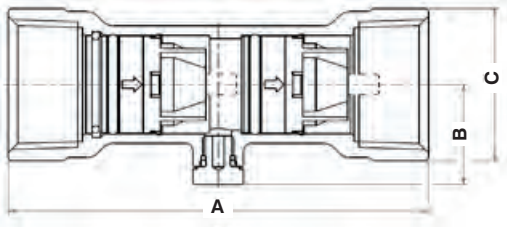

DIMENSIONS & WEIGHTS

Compression

Nom Size	mm	15	22	28
A	mm	82.1	101.3	115.2
B	mm	63.4	82.2	94.8
C	mm	25.2	27.5	30
D	mm	29.4	39.3	45.6
Weight (approx)	kg	0.17	0.29	0.41

Threaded

Nom Size	inch	1/2	3/4	1	11/4	11/2	2
A	inch	75.7	94.8	108	118	137	181
B	inch	20.2	22.3	25.6	29.7	36.8	37.1
C	inch	25.5	32	39	49.5	57	70
Weight (approx)	kg	0.13	0.21	0.33	0.49	0.79	1.41

010221

Every effort has been made to ensure that the information contained in this publication is accurate at the time of publishing. Hattersley Ltd assumes no responsibility or liability for typographical errors or omissions or for any misinterpretation of the information within the publication and reserves the right to change without notice.

Fig.160W
Single Non-Return Valve

WRAS APPROVED PRODUCT

FEATURES & BENEFITS

- Spring loaded axially guided disc
- Positive non-slam shut-off
- WRAS approved for use with wholesome (potable) water to 85°C
- Resilient seat
- WRAS Approved fusion bonded epoxy internal and external coating

Fig.160W

MATERIAL SPECIFICATION

Componant	Material	Specification	
		BS EN	ASTM
Body	Cast Iron	1561 EN-GJL-250	A126 CLASS B
Disc	Fusion Bonded Epoxy Cast Iron	1561 EN-GJL-250	A126 CLASS B
Seat	EPDM	-	-
Spring	Stainless Steel 304	1.4301	AISI 304
Stem	Stainless Steel 304	1.4301	AISI 304
Bushing	Brass	12164 CW617N	-
Guide	Cast Iron	1561 EN-GJL-250	A126 CLASS B

PRESSURE/ TEMPERATURE RATING

16 bar
-10 to 110°C (WRAS to 85°C)

SPECIFICATION

Flanged to BS EN 1092-2 PN16

DIMENSIONAL DRAWINGS

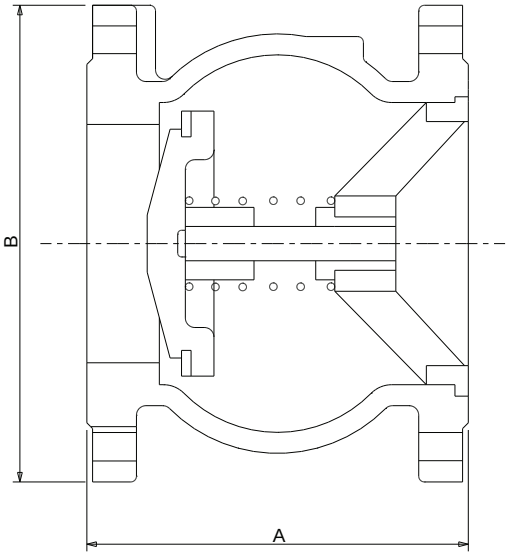

DIMENSIONS & WEIGHTS

Size (DN)		50	65	80	100	125	150	200	250	300
A	mm	100	120	140	170	200	230	288	354	410
B	mm	165	185	200	220	250	285	340	405	460
Weight	kg	8	10	13	17	28	38	52	85	125

Note: These valves are not intended to be used as backflow prevention devices conforming to Schedule 2 Section 6 of the WRAS Water Regulations Guide.

Every effort has been made to ensure that the information contained in this publication is accurate at the time of publishing. Hattersley Ltd assumes no responsibility or liability for typographical errors or omissions or for any misinterpretation of the information within the publication and reserves the right to change without notice.

200722

Hattersley®
Technical Helpline UK: 0845 604 1790 MEA: +971 4 816 5800
Email UK: tech-enquiries@hattersley.com
MEA: mena-techenquiries@hattersley.com

Fig.260W
Double Non-Return Valve

FEATURES & BENEFITS

- 2 WRAS approved single non-return valves (to 85°C) bolted together
- Spring loaded axially guided disc
- Positive non-slam shut-off
- Resilient seat
- WRAS Approved fusion bonded epoxy internal and external coating

Fig.260W

MATERIAL SPECIFICATION

Componant	Material	Specification	
		BS EN	ASTM
Body	Cast Iron	1561 EN-GJL-250	A126 CLASS B
Disc	Fusion Bonded Epoxy Cast Iron	1561 EN-GJL-250	A126 CLASS B
Seat	EPDM	-	-
Spring	Stainless Steel 304	1.4301	AISI 304
Stem	Stainless Steel 304	1.4301	AISI 304
Bushing	Brass	12164 CW617N	-
Guide	Cast Iron	1561 EN-GJL-250	A126 CLASS B
Gasket	EPDM (Shore 70) - WRAS Approved	-	-
Stud	Steel (Zinc Plated)	BS EN 3692 Grade 8.8	-
Nut	Steel (Zinc Plated)	BS EN 3692 Grade 8	-
Plug 1/4" RC	Stainless Steel 316/304	-	-

PRESSURE/ TEMPERATURE RATING

16 bar
-10 to 110°C

SPECIFICATION

Flanged to BS EN 1092-2 PN16

DIMENSIONAL DRAWINGS

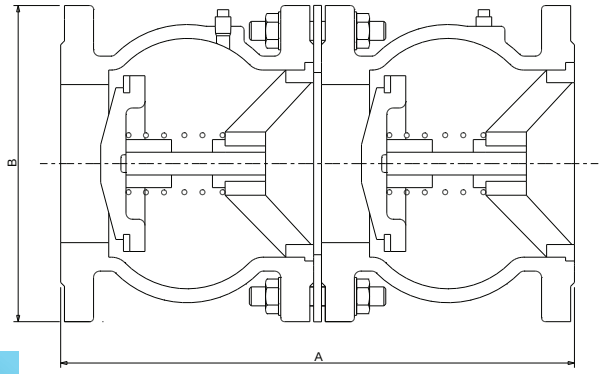

DIMENSIONS & WEIGHTS

Size (DN)		50	65	80	100	125	150	200	250	300
A	mm	203	243	283	343	403	463	579	711	823
B	mm	165	185	200	220	250	285	340	405	460
Weight	kg	17	21	28	36	58	78	108	174	255

Please Note: These valves are not intended to be used as backflow prevention devices conforming to Schedule 2 Section 6 of the WRAS Water Regulations Guide.

Title: Acceptability of two single check valves in place of a double check valve

Clause Reference: Schedule 2 paragraph 15(5) of the WRAS Water Regulations Guide

Two suitably approved single check valves (Type EA device) installed in series are accepted as offering the equivalent level of protection as that afforded by a double check valve (Type EC device) providing the maximum distance between the adjacent flanges of the valves did not exceed twice their nominal bore and the operation of one component does not interfere with the operation of the other.

200722

Every effort has been made to ensure that the information contained in this publication is accurate at the time of publishing. Hattersley Ltd assumes no responsibility or liability for typographical errors or omissions or for any misinterpretation of the information within the publication and reserves the right to change without notice.

Fig. M650
Cast Iron - Swing Pattern

NRV

FEATURES & BENEFITS

- Check valves permit flow in one direction only and close automatically if flow reverses
- Ideal for water or other liquids
- Bolted cover
- Swing type check valve with Bronze seat
- Suitable for mounting in horizontal and vertical pipelines
- Fusion Bonded Epoxy coating suitable for C3 environment

MATERIAL SPECIFICATION

Component	Material	Specification BS EN
Body	Cast Iron	BS EN 1561 GJL-250
Body Ring	Bronze	1982 CC491K
Disc	Cast Iron	BS EN 1561 GJL-250
Disc Face Ring	Bronze	1982 CC491K
Cover	Cast Iron	BS EN 1561 GJL-250
Cover Gasket	Asbestos Free	-
Hinge Pin	Stainless Steel	BS 970 304
Hinge	Ductile Iron	1563 EN-GJS-450

DIMENSIONAL DRAWING

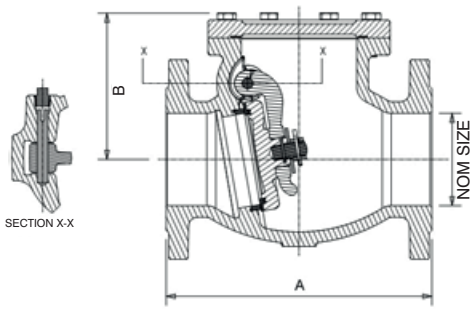

PRESSURE/ TEMPERATURE RATING

BS EN 16767 PN25
25 bar from -10 to 120ºC
21.5 bar at 220ºC
DN300: 110°C Max.

TEST PRESSURES (HYDRAULIC)

PN25
Shell: 37.5 bar
Seat: 27.5 bar

SPECIFICATION

Swing check valve with cast Iron body and bonnet to BS EN 1561 GJL-250, cast iron disk to BS EN 1561 GJL-250 with bronze disk facing and bronze seat to BS EN 1982 CC491K. Valve is full bore and manufactured in accordance with BS EN 16767 and rated PN16 with -10 to 220°C temperature range. Gasket material shall be graphite-based. Valve is supplied with drilled flanges in accordance with BS EN 1092-2 PN25. Valve has C3 corrosion level epoxy coating and shall be categorized in accordance with the Pressure Equipment Directive 2014/68/EU.

DIMENSIONS & WEIGHTS

Nom Size	mm	50	65	80	100	125	150	200	250	300
A	mm	267	292	318	356	400	444	533	622	711
B	mm	135	150	166	190	206	244	291	337	383
Weight	kg	17.6	31.0	35.8	55.7	80.4	110.9	180.0	277.0	408.5
Kv		123.7	208.9	316.4	494	772	1111.8	1976.50	3088.3	4447.1

FIG NO.	MATERIAL	PED CATEGORY BY VALVE SIZE (DN)				PRODUCT APPLICATIONS			
		SEP	1	2	3	Group 1 Gas	Group 2 Gas	Group 1 Liquid	Group 2 Liquid
M650	Cast Iron		50-80	100-250	300	-	✓	✓	✓

Every effort has been made to ensure that the information contained in this publication is accurate at the time of publishing. Hattersley Ltd assumes no responsibility or liability for typographical errors or omissions or for any misinterpretation of the information within the publication and reserves the right to change without notice.

180423

Hattersley®
Technical Helpline UK: 0845 604 1790 MEA: +971 4 816 5800
Email UK: tech-enquiries@hattersley.com
MEA: mena-techenquiries@hattersley.com

Fig. M651 / 651ANSI
Cast Iron - Swing Pattern

NRV

FEATURES & BENEFITS

- Suitable for velocities of up to 3 metres/second
- Ideal for water or other liquids
- Bolted cover
- Suitable for mounting in horizontal and vertical pipelines

MATERIAL SPECIFICATION

Component	Material	Specification	
		BS EN	ASTM
Body	Cast Iron	BS EN 1561 EN-JL 1040 (GJL-250)	A126 Cl B
Body Seat Ring	Bronze	1982 CC491K	B62-C83600
Disc	Cast Iron	1561 EN JLI040	A126 Cl B
Disc Face Ring	Bronze	1982 CC491K	B62-C83600
Cover	Cast Iron	1561 EN JLI040	A126 Cl B
Cover Gasket	Reinforced Compressed Graphite	-	
Hinge Pin	Brass	12164 CW603N	B16-C36000
Hinge Pin Plug	Brass	12164 CW603N	B16-C36000
Hinge	Ductile Iron	1563 EN-JS1040	A536 70-50-05

DIMENSIONAL DRAWING

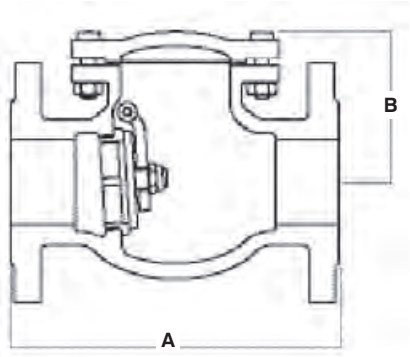

PRESSURE/ TEMPERATURE RATING

BS EN 1092-2 PN16
16 bar from -10 to 120ºC
11.8 bar at 230ºC

TEST PRESSURES

Shell: 24 bar (hydraulic)
Seat: 17.6 bar (hydraulic)

SPECIFICATION

BS EN 12334:2001.
Face to Face dimensions to BS EN 558-1 basic series 10.
Cast iron body.
Bolted cover.
Bronze trim.
Suitable for mounting in horizontal and vertical pipes (with the flow upwards).
M651, flanged to BS EN 1092-2 PN16.
651ANSI, flanges drilled to ANSI B16.1 125.

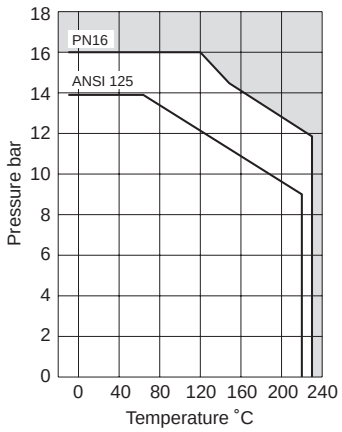

DIMENSIONS & WEIGHTS

Nom Size	mm	50	65	80	100	125	150	200	250	300
A	mm	203	216	241	292	330	356	495	622	699
B	mm	113	133	143	163	197	212	257	298	330
Weight	kg	13	18	21	35	48	68	113	218	282

180423

Every effort has been made to ensure that the information contained in this publication is accurate at the time of publishing. Hattersley Ltd assumes no responsibility or liability for typographical errors or omissions or for any misinterpretation of the information within the publication and reserves the right to change without notice.

Fig. 861 (PN16) / 861A (ANSI 125) / 866 (PN25)
Fig. 861W (PN16)

WRAS APPROVED PRODUCT

NRV

FEATURES & BENEFITS

- Check valves permit flow in one direction only and close automatically if flow reverses, depending upon pressure and velocity of flow to perform the functions of the opening and closing
- Non-Slam design as a result of rubber seat and spring-assisted closure
- EPDM rubber seat to facilitate quiet operation and improve disk seating
- Eyebolt tapped holes in sizes DN200 and above, to fit eyebolts to BS EN 1S0 3226: 2010 (eyebolts are not supplied with valve)
- Design and construction lends itself to pump duty applications
- WRAS approved model 861W DN50 - DN300 for potable water applications rated PN16.

MATERIAL SPECIFICATION

No.	Component	Material	Note
1	Body	Cast Iron EN-GJL-250	Fig 861/ 861A DN50-DN150
		Ductile Iron EN-GJS-400-15	Fig 861/ 861A DN200-DN600
		Ductile Iron EN-GJS-400-15	PN25 DN50-DN600 Fig 866 / PN16 DN50-DN300 Fig 861W
2	Disc	Stainless Steel SS304	-
3	ID Plate	Anodised Aluminium	-
4	Seat	EPDM	Max. 120ºC (85° C for WRAS)
5	Stop Bolt	Stainless Steel 304	-
6	Stem	Stainless Steel 304	-
7	Spring	Stainless Steel 304	-
8	Washer	PTFE	85° C for WRAS
9	Gasket	EPDM	Max. 120ºC (85° C for WRAS)

PRESSURE/ TEMPERATURE RATING

Figure 861: PN16 861W: PN16
Figure 861A : ANSI 125
Figure 866 : PN25
Min Opening Pressure: 4kPa
Temperature range -10 to 120°C
85° C for WRAS

END CONNECTION

Suitable for flange connection to BS EN 1092-2 PN16 / BS EN 1092-2 PN25 / ANSI B16.1 125

SPECIFICATION

Dual Plate Wafer type Check Valve, in accordance with BS EN 16767 with face to face according to BS EN 558 series 16. Cast Iron / Ductile Iron Body, SS304 Disc, Stem and spring, EPDM seat, PTFE gasket and washers, Fusion bonded epoxy coating suitable for C3 environment. WRAS approved model suitable upto 85 Deg C with WRAS approved EPDM seat, WRAS approved PTFE gasket, washer, and WRAS approved coating. Valve is suitable for use on Group 2 liquids as defined by the Pressure Equipment Directive 2014/68/EU.*

DIMENSIONAL DRAWING

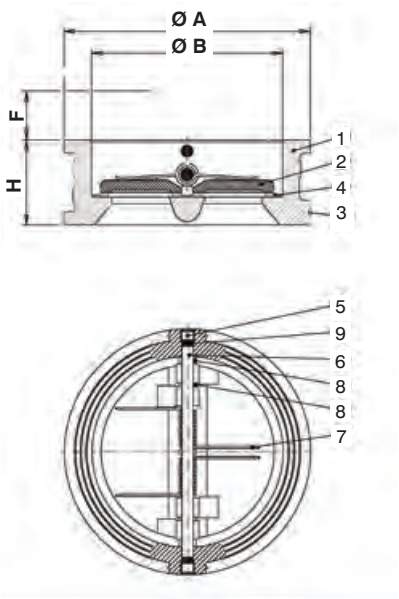

DIMENSIONS & WEIGHTS

Size	A (mm) PN16 PN25	A (mm) ANSI 125	B (mm)	F (mm)	H (mm)	Weight (kg)	Eyebolt Tapping	Kv Values
DN50	107	102	66.0	10.0	43.0	1.5	N/A	44
DN65	127	121	80.5	16.0	46.0	2.2	N/A	102
DN80	142	133	95.0	15.0	64.0	3.2	N/A	128
DN100	162	171	119.0	28.0	64.0	4.1	N/A	203
DN125	192	193	146.0	38.0	70.0	5.7	N/A	528
DN150	218	219	171.0	47.0	76.0	8.2	N/A	688
DN200	273	276	224.5	70.0	89.0	14.6	M8	1315
DN250	328	336	266.0	78.0	114.0	24.2	M10	2315
DN300	382	406	311.0	104.0	114.0	35.8	M10	3623
DN350	442	448	360.0	127.0	127.0	54.0	M12	4620
DN400	495	511	410.0	143.0	140.0	76.0	M12	5166
DN450	555	546	450.0	158.0	152.0	103.0	M16	6164
DN500	617	603	505.0	183.0	152.0	126.0	M16	9670
DN600	734	714	624.0	221.0	178.0	187.0	M16	15340

Eyebolt tapping to BS EN 3226: 2010
Kv valves: fully open

Every effort has been made to ensure that the information contained in this publication is accurate at the time of publishing. Hattersley Ltd assumes no responsibility or liability for typographical errors or omissions or for any misinterpretation of the information within the publication and reserves the right to change without notice.

090622

Hattersley®
Technical Helpline UK: 0845 604 1790 MEA: +971 4 816 5800
Email UK: tech-enquiries@hattersley.com
MEA: mena-techenquiries@hattersley.com

S Shand-Brown

Project: European Bank for Reconstruction and Development
Sector: Commercial
Distributor: Smith Brothers Stores
Contractor: E&B Group
Specification: Chiller replacement, general isolating valves up to 400mm, commissioning valves up to 200mm, non-return valves and strainers.

Project: Fakeeh Academic Medical Centre
Sector: Medical
Location: Dubai
MEP Consultants: Studio Altieri
MEP Contractor: Habtoor Leighton Group
Specification: A range of Hattersley traditional & commissioning valves

This joint venture project is promoted as the region's first smart hospital, in the UAE. The 2nd build phase incorporated a hi-tech medical university.

The scope of works included the construction of a 150-bed smart hospital and the installation of the medical equipment and the loose furniture. The company said in its statement, "The aim is to produce leading-edge research and treatment facilities with the construction of the Fakeeh Academic Medical Centre".

The new facility comprises five centres of excellence that specialise in diabetes and endocrinology, muscles, bones and joints, emergency medicine, pulmonary medicine and cardiology. It offers robotic surgery and features an automated medication dispensing system.

All the construction works were performed in order to permit the building to achieve the LEED Silver Certificate.

Hattersley valves were selected as the brand to be used because of their extensive and reliable range of products that they have to offer. Using the correct valve for the correct application was key to delivering this project on time and with the extensive stock held at their Distribution Centre, Hattersley was able to meet the delivery requirements on time for the MEP contractor.

Ryan Pickard

Hattersley®
Technical Helpline UK: 0845 604 1790 MEA: +971 4 816 5800
Email UK: tech-enquiries@hattersley.com
MEA: mena-techenquiries@hattersley.com

021219

Gate Valves

Hattersley gate valves offer the ultimate in dependable service wherever minimum pressure drop is important.

They serve as efficient stop valves with fluid flow in either direction. The straight through design offers little resistance to flow and reduces pressure drop to a minimum. A gate-like disc - actuated by a stem screw and handwheel - moves up and down at right angles to the path of flow, and seats against two seat faces to shut off the flow. Gate valves are not recommended for throttling since the control characteristic is not appropriate and subsequent damage, due to erosion, may prevent the valve providing an effective shut off.

Fig. No.	PN Rating	Series	End Connections	Size Range	Bonnet Pattern	Wedge Material
33X*†	20	B	Threaded	1/4 - 4”	Threaded	Bronze
33XLS*†	20	B	Threaded	1/4 - 4”	Threaded	Bronze
30*†	20	B	Threaded	1/4 - 2”	Threaded	DZR Alloy
30LS*†	20	B	Threaded	1/4 - 2”	Threaded	DZR Alloy
30C†	16	B	Compression	15 - 54mm	Threaded	Bronze
30CLS†	16	B	Compression	15 - 54mm	Threaded	Bronze
C31	16	B	Threaded	1/2 - 2”	Threaded	Bronze
33*	32	B	Threaded	1/4 - 2”	Threaded	Bronze
669	32	B	Threaded	1/2 - 2”	Union	Bronze
28	16	-	Threaded	1/2 - 3”	Threaded	Bronze
35PN16†	16	B	Flanged	20 - 100mm	Threaded	Bronze
609	32	A	Threaded	1/2 - 2"	Threaded	Bronze
C618	20	B	Threaded	1/2 - 2”	Threaded	Bronze

† WRAS Approved Product
* Kitemarked to the relevant British Standard

Fig. No.	PN/ANSI Rating	End Connections	Size Range	Pattern
M549 PN6	6	Flanged	50 - 200mm	Inside Screw
M552 PN6	6	Flanged	50 - 300mm	Outside Screw
M511 PN10	10	Flanged	50 - 150mm	Inside Screw
M541 PN16	16	Flanged	50 - 400mm	Inside Screw
M544 PN16	16	Flanged	50 - 350mm	Outside Screw
M540 PN25	25	Flanged	50 - 150mm	Inside Screw
501 ANSI	Class 125	Flanged	2 - 12"	Inside Screw
504 ANSI	Class 125	Flanged	2 - 24"	Outside Screw

Alternative flange options available on some products. See individual datasheets.

Fig. 30

120121

Technical Helpline UK: 0845 604 1790 MEA: +971 4 816 5800
Email UK: tech-enquiries@hattersley.com
MEA: mena-techenquiries@hattersley.com

Fig. 33X & 33XLS Bronze

WRAS APPROVED PRODUCT

FEATURES & BENEFITS

- Robust and high quality bronze body with integral seating surfaces
- Kitemarked to BS EN 12288
- WRAS approved for use on wholesome (potable) water in sizes 1/2" – 2" only
- WRAS approval temperature 85ºC
- Inside screw pattern with non-rising stem

MATERIAL SPECIFICATION

Component	Material	Specification	
		BS EN	ASTM
Body	Bronze	1982 CC491K	B62 C83600
Bonnet	Bronze	1982 CC491K	B62 C83600
Stem (1/4" to 3")	DZR Brass	12164 CW602N	
Stem (4")	Al Bronze	12163 CW301G	B150 C64200
Disc	Bronze	1982 CC491K	B62 C83600
Stuffing Box (2 1/2" & 3")	Brass	12165 CW617N	B124 C37700
Stuffing Box 4"	Bronze	1982 CC491K	B62 C83600
Packing Ring	Asbestos Free	-	
Gland (1/2" to 3")	Brass	12164 CW614N	
Gland (4")	Bronze	1982 CC491K	B62 C83600
Lockshield Cap	Brass	12164 CW614N	
Packing Nut (1/2" to 3")	Brass	12164 CW614N	
Packing Nut (4")	Bronze	1982 CC491K	B62-C83600
Handwheel	Aluminium	-	
Identification Plate	Aluminium	-	
Gasket	Fibre	-	
Handwheel Nut	Brass	12164 CW614N	

DIMENSIONAL DRAWINGS

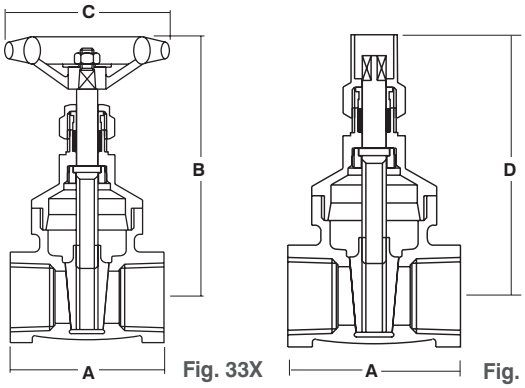

Fig. 33X Fig. 33XLS

PRESSURE/ TEMPERATURE RATING

BS EN 12288 PN20 Series B
9 bar at 180ºC
20 bar from -10 to 100ºC

TEST PRESSURES (PNEUMATIC)

Shell: 6 bar
Seat: 6 bar

(HYDRAULIC)

Shell: 30 bar
Seat: 22 bar

SPECIFICATION

Kitemarked to BS EN 12288:2010.
WRAS Approved Product.
Non-rising stem.
Threaded bonnet.
One piece wedge.
Taper threaded BS EN 10226 formerly BS 21.
Available with NPT thread (33XAT) 1/2 to 4".
Available with lockshield (33XLS) up to 2".

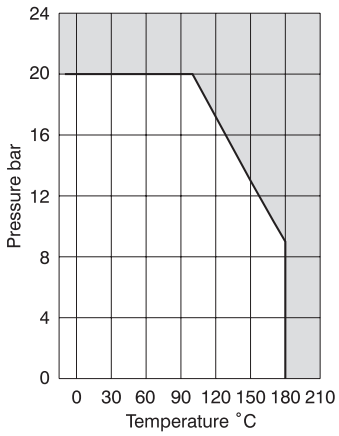

DIMENSIONS & WEIGHTS

Nom Size	in	1/4	3/8	1/2	3/4	1	1 1/4	1 1/2	2	2 1/2	3	4
A	mm	46	46	51	55	63	71	73	83	96	105	162
B	mm	75	75	82	95	118	144	166	190	219	259	366
C	mm	57	57	5	69	69	76	81	94	140	150	232
D	mm	-	-	86	112	124	149	175	196	227	270	376
Weight	kg	0.27	0.26	0.35	0.55	0.84	1.18	1.66	2.55	4.30	6.4	18.37

120121

Every effort has been made to ensure that the information contained in this publication is accurate at the time of publishing. Hattersley Ltd assumes no responsibility or liability for typographical errors or omissions or for any misinterpretation of the information within the publication and reserves the right to change without notice.

Fig. 30 & 30LS
DZR

WRAS APPROVED PRODUCT

IV

FEATURES & BENEFITS

- Dezincification Resistant Brass prevents corrosion and fungal growth
- WRAS Approved for use with potable water
- Inside screw pattern with non-rising stem

MATERIAL SPECIFICATION

Component	Material	Specification BS EN
Handwheel Nut	Brass	12164 CW614N
Identification Plate	Aluminium	-
Handwheel	Aluminium	-
Stem	DZR Brass	12164 CW602N
Packing Nut	Brass	12164 CW614N
Gland	Brass	12164 CW614N
Packing Ring	Asbestos Free	-
Body	DZR Brass	12164 CW602N
Disc	DZR Brass	12164 CW602N
Stuffing Box	DZR Brass	12164 CW602N
Bonnet	DZR Brass	12164 CW602N

DIMENSIONAL DRAWINGS

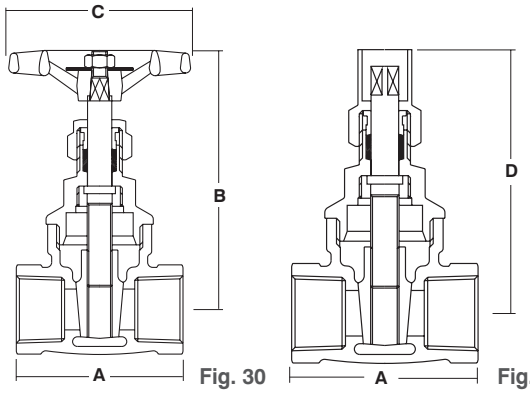

Fig. 30 Fig. 30LS

PRESSURE/ TEMPERATURE RATING

BS EN 12288 PN20 Series B
9 bar at 180ºC
20 bar from -10 to 100ºC
WRAS Approved Product to 85°C

TEST PRESSURES

Shell: 6 bar
Air Seat: 6 bar

SPECIFICATION

WRAS Approved Product.
Non-rising stem.
Threaded bonnet.
One piece wedge.
Taper threaded BS EN 10266 (ISO 7-1) formerly BS 21.
Available with lockshield (30LS).
Available with NPT thread (30AT).

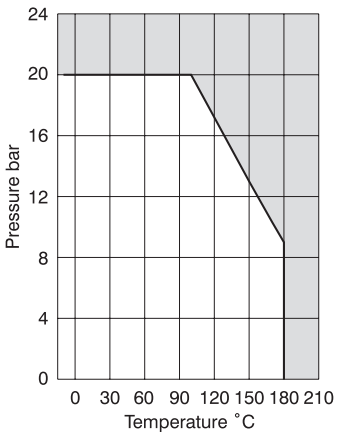

DIMENSIONS & WEIGHTS

Nom Size	in	1/2	3/4	1	1 1/4	1 1/2	2
A	mm	51.6	56	64	72	75	91
B	mm	90	100	120	125	145	170
C	mm	56.8	56.8	69.2	69.2	75.5	81.5
D	mm	80	85	105	110	130	155
Weight	kg	0.32	0.45	0.7	1.22	1.55	2.45
Lockshield key	Fig.	391	391	391	391	391	391
	Ref	A	A	2	2	2A	3

Every effort has been made to ensure that the information contained in this publication is accurate at the time of publishing. Hattersley Ltd assumes no responsibility or liability for typographical errors or omissions or for any misinterpretation of the information within the publication and reserves the right to change without notice.

230623

Hattersley®
Technical Helpline UK: 0845 604 1790 MEA: +971 4 816 5800
Email UK: tech-enquiries@hattersley.com
MEA: mena-techenquiries@hattersley.com

Fig. 30C & 30CLS Bronze

WRAS APPROVED PRODUCT

IV

FEATURES & BENEFITS

- Robust and high quality bronze body with integral seating surfaces
- Offers the ultimate in dependable service wherever minimum pressure drop is important
- WRAS Approved for use with potable water
- Inside screw pattern with non-rising stem

MATERIAL SPECIFICATION

Component	Material	Specification BS EN
Body	Bronze	BS EN 1982 (CC491K)
Bonnet	Bronze	BS EN 1982 (CC491K)
Stem	DZR Brass	BS EN 12164 CW602N
Disc	Bronze	BS EN 1982 (CC491K)
Stem Retainer	DZR Brass	BS EN 12164 CW602N
Packing Ring	Asbestos Free	-
Gland (28-54 only)	Brass	BS EN 12164 CW614N
Packing Nut	Brass	BS EN 12164 CW614N
Handwheel	Aluminium	-
Identification Plate	Aluminium	-
Handwheel Nut	Brass	BS EN 12164 CW614N
Compression Olive	Brass	BS EN 12449:1999 CW505L OR CW507L
Compression Nut	Brass	BS EN 12165 CW617N

PRESSURE/TEMPERATURE RATINGS COMPRESSION

Temperature °C	-10 to 30	40	50	65	80	90	100	110	120
Pressure bar	16	14.3	12.6	10	8.7	7.8	6.9	6	5

WRAS approved to 99°C
Intermediate pressure ratings shall be determined by interpolation.

DIMENSIONAL DRAWINGS

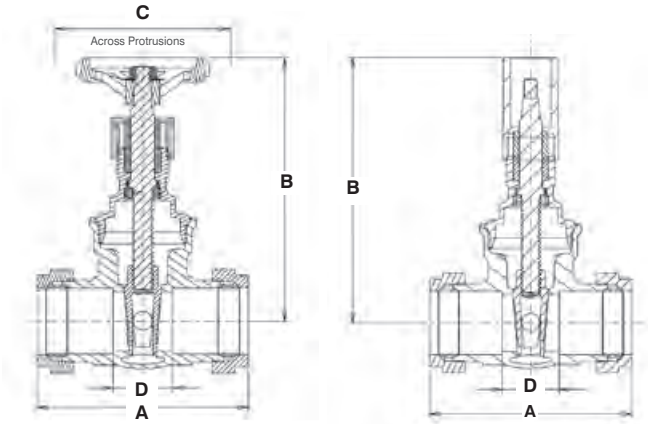

Fig. 30C Fig. 30CLS

TEST PRESSURES (PNEUMATIC)

Shell: 6 bar
Seat: 6 bar

SPECIFICATION

UK End Connection: Compression ends to BS EN 1057:2006: Half hard R250.

Operator: Handwheel.

Gate valves or lockshield are best for services that require infrequent valve operation and where the disc is kept either fully open or closed. They are not practical for throttling.

Valves are manufactured in accordance with BS EN 12288: 2010 (formerly BS 5154) PN20 for Series B ratings, but are limited to the pressure/ temperature ratings detailed in BS EN 1057:2006 for compression end fittings.

This valve is to be used on Group 2 liquids only, as defined by the Pressure Equipment Directive 2014/68/EU.

DIMENSIONS & WEIGHTS

30C

Nom Size	mm	15	22	28	35	42	54
A	mm	69	75	86	100	111	133
B	mm	74	86	105	110	130	152
C	mm	48	69	76	81	94	100
D	mm	26.5	23.5	25.5	30.5	34.5	37
Weight	kg	0.34	0.50	0.70	0.95	1.45	2.50

30CLS

Nom Size	mm	15	22	28	35	42	54
A	mm	69	75	86	100	111	133
B	mm	78	90	110	115	136	160
D	mm	26.5	23.5	25.5	30.5	34.5	37
Weight	kg	0.34	0.50	0.70	0.95	1.45	2.50

Every effort has been made to ensure that the information contained in this publication is accurate at the time of publishing. Hattersley Ltd assumes no responsibility or liability for typographical errors or omissions or for any misinterpretation of the information within the publication and reserves the right to change without notice.

201021

Fig. C31
Bronze

IV

FEATURES & BENEFITS

- Robust and high quality bronze body with integral seating surfaces
- Inside screw pattern with non-rising stem
- Double O-ring sealing for guaranteeing zero leakage

MATERIAL SPECIFICATION

Component	Material	Specification
Handwheel	Aluminium Alloy	-
Stem	DZR Brass	BS EN 12164 CW602N
O-Ring	EPDM	-
Retaining Screw	DZR Brass	BS EN 12164 CW602N
Bonnet	Bronze	BS EN 1982 CC491K
Wedge	Bronze	BS EN 1982 CC491K
Body	Bronze	BS EN 1982 CC491K

DIMENSIONAL DRAWING

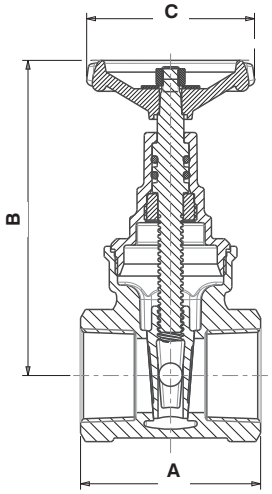

PRESSURE/ TEMPERATURE RATING

16 bar from -10 to 100°C
13.5 bar at 120°C

TEST PRESSURES (HYDRAULIC)

Each valve is individually hydrostatically / air tested to BS EN 12266 at the following test.
Shell: 20 bar
Seat: 6 bar

SPECIFICATION

Bronze body and bonnet.
Non-rising stem.
Threaded bonnet.
One piece wedge.
Double O-ring seal

DIMENSIONS & WEIGHTS

Nom Size	in	1/2	3/4	1	1 1/4	1 1/2	2
A	mm	49.5	53.5	61.7	64.1	70.4	75.2
B	mm	79.3	90.7	108.9	116.2	130.7	149.8
C	mm	56.8	69.2	75.5	81.3	93.9	100.3
Weight	kg	0.29	0.42	0.60	0.82	1.08	1.53

Every effort has been made to ensure that the information contained in this publication is accurate at the time of publishing. Hattersley Ltd assumes no responsibility or liability for typographical errors or omissions or for any misinterpretation of the information within the publication and reserves the right to change without notice.

120121

Hattersley®
Technical Helpline UK: 0845 604 1790 MEA: +971 4 816 5800
Email UK: tech-enquiries@hattersley.com
MEA: mena-techenquiries@hattersley.com

Fig. 33
Bronze

IV

FEATURES & BENEFITS

The Fig. 33 incorporates a robust and high quality bronze body with integral seating surfaces for excellent corrosion resistance and reliability in building services applications.

- Non-rising stem design to minimise installation height
- Full bore design to ensure minimal pressure drop
- Adjustable gland packing for ease of maintenance
- Material selection results in superior dezincification (DZR) and corrosion resistance properties
- Body, bonnet and disc are made from low lead content bronze, typically 4-6%

MATERIAL SPECIFICATION

Component	Material	Specification	Sizes
Body	Bronze	BS EN 1982 (CC491K)	ALL
Bonnet	Bronze	BS EN 1982 (CC491K)	ALL
Stem	DZR Brass	BS EN 12164 CW602N	ALL
Disc	Bronze	BS EN 1982 (CC491K)	ALL
Stem Retainer	DZR Brass	BS EN 12164 CW602N	1/2 - 2
Stuffing Box	DZR Brass	BS EN 12164 CW602N	1/4 - 3/8
Gland	Brass	BS EN 12164 CW614N	1 - 2
Packing Nut	Brass	BS EN 12164 CW614N	1/2 - 2
Packing Ring	PTFE	-	ALL
Handwheel	Aluminium	-	ALL
Handwheel Nut	Brass	BS EN 12164 CW614N	ALL
Identification Plate	Aluminium	-	ALL

Please note: the photograph & dimensional drawing denotes sizes 1/2" - 2" only.

DIMENSIONAL DRAWING

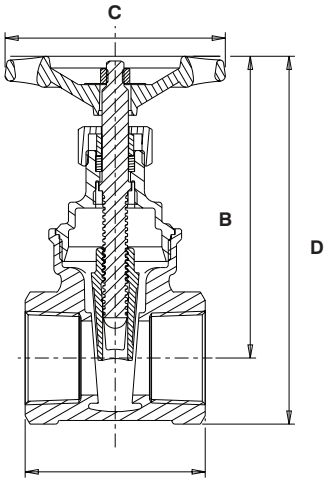

PRESSURE/ TEMPERATURE RATING

BS EN 12288 PN32 Series B
32 bar from -10 to 100ºC
14 bar at 198ºC

TEST PRESSURES (HYDRAULIC)

Shell: 48 bar
Seat: 35.2 bar

SPECIFICATION

The valve body, bonnet and disc shall be of Bronze to BS EN 1982 CC491K. The stem shall be of DZR Brass to BS EN 12164 CW602N. Operation shall be by hand wheel. Ends to be threaded to BS EN 10226-2.
The valve is to be rated at PN32 and manufactured in accordance with BS EN 12288: 2010.
Available with NPT thread: Fig. 33AT - 1/2 to 2".

The Non-Rising Stem Gate Valves are unsuitable for use on Group 1 gases or unstable fluids, as defined by the Pressure Equipment Directive 2014/68/EU.

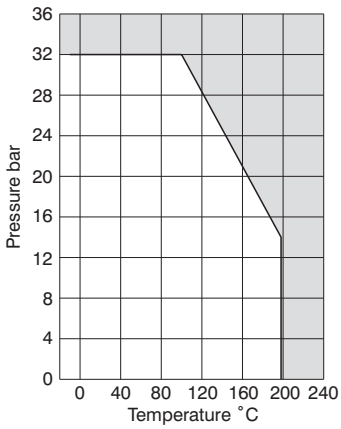

DIMENSIONS & WEIGHTS

Nom Size	in	1/4	3/8	1/2	3/4	1	1 1/4	1 1/2	2
A	mm	46	46	50	54	62	71	77.5	87.5
B	mm	78	78	74	85	106	115	132	155
C	mm	60	60	56.8	69.2	75.5	81.3	93.9	100
D	mm	89.7	89.7	89	104	128	143	165	193
Kv	mm	-	-	21	39	66	116	162	281
Weight	kg	0.36	0.36	0.3	0.4	0.6	0.9	1.3	2.1

120121

Every effort has been made to ensure that the information contained in this publication is accurate at the time of publishing. Hattersley Ltd assumes no responsibility or liability for typographical errors or omissions or for any misinterpretation of the information within the publication and reserves the right to change without notice.

Fig. 669
Bronze

IV

FEATURES & BENEFITS

- Robust and high quality bronze body with integral seating surfaces
- Inside screw pattern with rising stem
- Suitable for high pressures up to 32 bar

MATERIAL SPECIFICATION

Component	Material	Specification	
		BS EN	ASTM
Body	Bronze	1982 CC491K	B62 C83600
Bonnet	Bronze	1982 CC491K	B62 C83600
Stem	Bronze	1982 CC491K	B62 C83600
Disc	Bronze	1982 CC491K	B62 C83600
Packing Ring	Asbestos Free	-	
Gland	Brass	12164 CW614N	
Packing Nut	Brass	12164 CW614N	
Handwheel	Aluminium	-	
Handwheel Nut	Brass	12164 CW614N	
Union Ring	Bronze	1982 CC491K	B62 C83600
Identification Plate	Aluminium	-	

DIMENSIONAL DRAWING

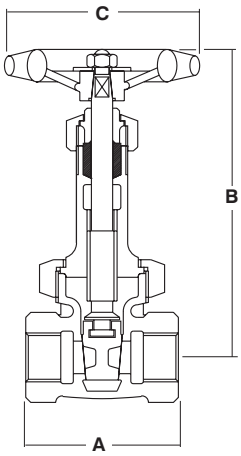

DIMENSIONS & WEIGHTS

Nom Size	in	1/2	3/4	1	1 1/4	1 1/2	2
A	mm	51	55	63	71	73	83
B	mm	137	169	194	232	266	321
C	mm	76	81	94	100	120	140
Weight	kg	0.46	0.72	1.10	1.50	2.25	3.20

PRESSURE/ TEMPERATURE RATING

BS EN 12288 PN32 Series B
32 bar from -10 to 120ºC
14 bar at 260ºC

TEST PRESSURES (HYDRAULIC)

Shell: 48 bar
Seat: 35.2 bar

SPECIFICATION

BS EN 12288:2010.
Rising stem.
Union bonnet.
One piece wedge.
Taper threaded BS EN 10226 (ISO 7-1) formerly BS 21.
All sizes are available with NPT thread (669AT).

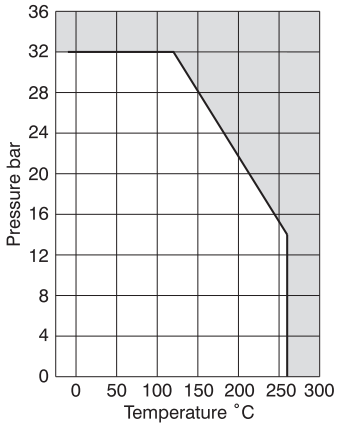

Every effort has been made to ensure that the information contained in this publication is accurate at the time of publishing. Hattersley Ltd assumes no responsibility or liability for typographical errors or omissions or for any misinterpretation of the information within the publication and reserves the right to change without notice.

120121

Hattersley®
Technical Helpline UK: 0845 604 1790 MEA: +971 4 816 5800
Email UK: tech-enquiries@hattersley.com
MEA: mena-techenquiries@hattersley.com

Fig. 609
Bronze

IV

FEATURES & BENEFITS

- Robust and high quality bronze body with integral seating surfaces
- Inside screw pattern with rising stem
- Suitable for high pressures up to 32 bar

MATERIAL SPECIFICATION

Component	Material	Specification	
		BS EN	ASTM
Body	Bronze	1982 CC491K	B62 C83600
Bonnet	Bronze	1982 CC491K	B62 C83600
Stem (1/4" to 2")	Bronze	1982 CC491K	B62 C83600
Stem (2 1/2")	AL. Brass (CA 12)	12163 CW301G	
Stem (3")	Bronze	1982 CC491K	B62 C83600
Disc	Bronze	1982 CC491K	B62 C83600
Packing Ring	Asbestos Free	-	
Gland	Brass	12164 CW614N	
Packing Nut (2 1/2" & 3")	Brass	12164 CW721R	
Packing Nut (1/4" to 2")	Brass	12164 CW614N	
Handwheel	Aluminium	-	
Identification Plate	Aluminium	-	
Handwheel Nut	Brass	12164 CW614N	

DIMENSIONAL DRAWING

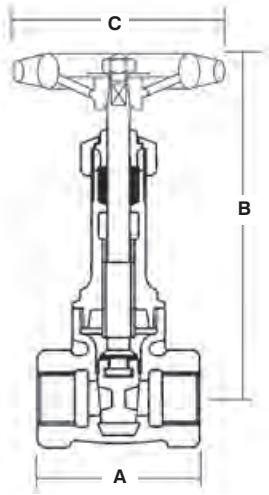

DIMENSIONS & WEIGHTS

Nom Size	in	1/2	3/4	1	1 1/4	1 1/2	2
A	mm	51	55	63	71	73	83
B (Open)	mm	133	162	191	223	253	307
C	mm	70	80	85	95	105	120
Weight	kg	0.50	0.75	1.30	1.70	2.60	3.50

PRESSURE/ TEMPERATURE RATING

32 bar from -10 to 100ºC
14 bar at 198ºC

TEST PRESSURES (HYDRAULIC)

Each valve is individually hydrostatically tested to BS EN 12266 at the following test pressures.
Shell: 48 bar
Seat: 35.2 bar

SPECIFICATION

Rising stem.
Threaded bonnet.
One piece wedge.
Bronze trim.
Taper threaded BS EN 10226 (ISO 7-1) formerly BS 21.
Complies with BS EN 12288:2010.
All sizes are available with American Threads. (Fig. 609AT)

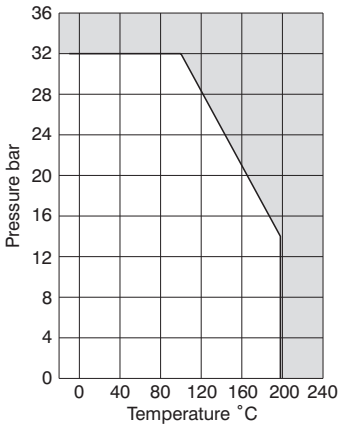

120121

Every effort has been made to ensure that the information contained in this publication is accurate at the time of publishing. Hattersley Ltd assumes no responsibility or liability for typographical errors or omissions or for any misinterpretation of the information within the publication and reserves the right to change without notice.

Fig. 35
Bronze

IV

FEATURES & BENEFITS

- Robust and high quality bronze body with integral seating surfaces
- Flanges ends require no pipe threading
- Inside screw pattern with non-rising stem

MATERIAL SPECIFICATION

Component	Material	Specification	
		BS EN	ASTM
Body	Bronze	1982 CC491K	B62 C83600
Bonnet	Bronze	1982 CC491K	B62 C83600
Stem	Brass	12164 CW614N	
Disc	Bronze	1982 CC491K	B62 C83600
Gland	Brass	12164 CW614N	
Stuffing Box	Brass	12165 CW617N	B124 C37700
Packing Ring	Graphite	-	
Packing Nut	Brass	12164 CW614N	
Handwheel	Aluminium	-	
Identification Plate	Aluminium	-	
Handwheel Nut	Brass	12164 CW614N	

DIMENSIONAL DRAWING

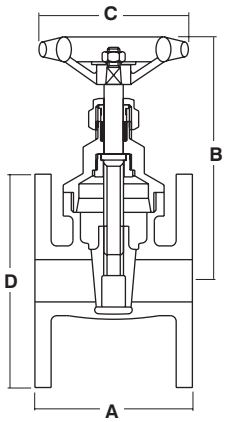

PRESSURE/ TEMPERATURE RATING

BS 5154 PN16 Series B
16 bar from -10 to 100ºC
7 bar at 170ºC

TEST PRESSURES (HYDRAULIC)

Shell: 24 bar
Seat: 17.6 bar

SPECIFICATION

Non-rising stem.
Threaded bonnet.
One piece wedge.
Flanged to BS EN 1092-3 PN16.

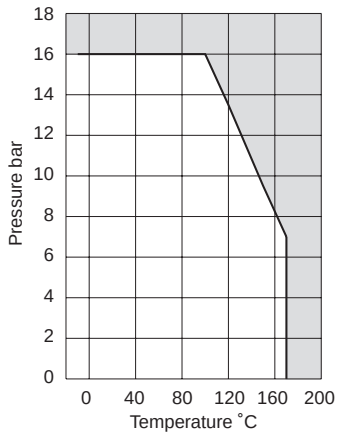

DIMENSIONS & WEIGHTS

Nom Size	mm	20	25	32	40	50	65	80	100
A	mm	90	100	110	120	135	165	185	190
B	mm	110	130	145	165	200	240	280	365
C	mm	80	85	95	120	120	155	180	230
D	mm	105	115	140	150	165	185	200	220
Weight	kg	2.1	2.7	4.0	4.4	6.3	9.1	15.4	22.2

Every effort has been made to ensure that the information contained in this publication is accurate at the time of publishing. Hattersley Ltd assumes no responsibility or liability for typographical errors or omissions or for any misinterpretation of the information within the publication and reserves the right to change without notice.

120121

Hattersley®
Technical Helpline UK: 0845 604 1790 MEA: +971 4 816 5800
Email UK: tech-enquiries@hattersley.com
MEA: mena-techenquiries@hattersley.com

Fig.589 HW / Fig.589 SA Resilient Seated Gate Valve

WRAS APPROVED PRODUCT

FEATURES & BENEFITS

- Manufactured in accordance with BS EN 1074 for quality assurance
- Handwheel (Fig. 589 HW) or Stem Adaptor (Fig. 589 SA) version available
- WRAS approved product up to 80°C. Components and coating WRAS approved to 85°C.
- WRAS listed fusion bonded epoxy coating, minimum thickness 250 micron and corrosion resistant construction
- Manufactured from Ductile Iron BS EN1563 EN-GJS-500-7 for improved durability
- Ductile iron disc encapsulated with EPDM WRAS elastomer for improved isolation
- 5 internal O-Rings and 1 additional wiper seal preventing ingress and improving functional versatility.

MATERIAL SPECIFICATION

Component	Material	Specification	Qty
Body	Ductile Iron	BS EN 1563 EN-GJS-500-7	1
Disc	Ductile Iron / EPDM	BS EN 1563 EN-GJS-500-7	1
Stem	SS420	-	1
Bonnet	Ductile Iron	BS EN 1563 EN-GJS-500-7	1
Bonnet Gasket	EPDM	BS EN 681 - I	1
O-ring	EPDM	BS EN 681 - I	5
Wiper Seal	EPDM	BS EN 681 - I	1
Thrust Nut/Washer	Brass	BS EN 12164 CW611N	1
Stem Nut	SS304	-	1
Handwheel	Ductile Iron	BS EN1563 EN-GJS-500-7	1
Stem Cap	Ductile Iron	BS EN1563 EN-GJS-500-7	1

Fig. 589 SA

Fig. 589 HW

PRESSURE/ TEMPERATURE RATING

0°C to 85°C
(WRAS approved to 80°C)

END CONNECTION

Flanged to BS EN 1092-2

OPERATOR

Fig. 589 HW Handwheel / Fig. 589 SA Stem Adaptor

SPECIFICATION

Ductile Iron Resilient Seated Gate Valve designed in accordance with BS EN 1074-1, 1074-2 and BS 5163. Designed with GGG50 Ductile Iron Body, Bonnet, Disc, and SS Stem for improved durability, and superior sealing performance with 5 O-Rings and 1 additional Wiper Seal.WRAS approved up to 80°C for use with potable water applications. Internal components and coating WRAS approved up to 85°C. EN 558 Series 3 face to face supplied as standard. Series 14 available upon request.

These valves fall into the SEP category and as such do not require CE markings or notified body markings.

DIMENSIONS & WEIGHTS

Size (DN)		50	65	80	100	125	150	200	250	300
A	mm	300	354	371	421	471	534	669	807	921
B	mm	205	250	260	300	335	380	488	592	680
C	mm	200	200	254	254	315	315	315	406	406
D	mm	165	185	200	220	250	285	340	405	460
L	mm	178	190	203	229	254	267	292	330	356
Weight	kg									
Handwheel		9.7	12.5	14.8	20.8	25.3	33.0	52.2	84.1	114.2
Cap		9.3	12.1	13.9	20.1	23.9	31.6	50.7	81.3	111.4

DIMENSIONAL DRAWING

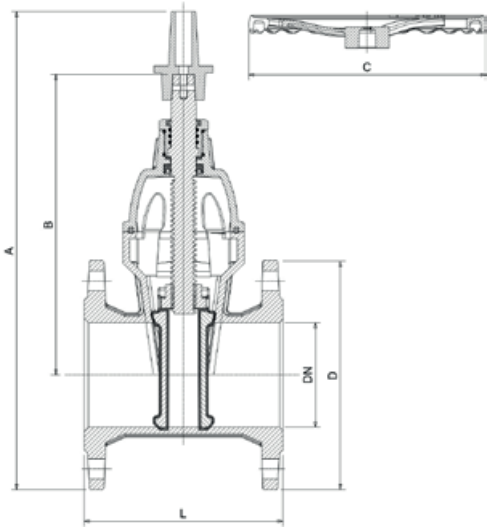

Every effort has been made to ensure that the information contained in this publication is accurate at the time of publishing. Hattersley Ltd assumes no responsibility or liability for typographical errors or omissions or for any misinterpretation of the information within the publication and reserves the right to change without notice.

090523

Fig. M511
Cast Iron

IV

FEATURES & BENEFITS

- Cast Iron with integral flanges
- Inside screw pattern with non-rising stem
- Ideal for use for non-corrosive and reasonably clean services
- Seat rings are threaded and securely fixed into the body

MATERIAL SPECIFICATION

Component	Material	Specification
Handwheel	Grey Iron	BS EN 1561 EN-GJL-250
Gland	Grey Iron	BS EN 1563 EN-GJS-450-10
Gland Packing	Graphite	Asbestos Free
Stuffing Box	Grey Iron	BS EN 1561 EN-GJL-250
Stuffing Box Gasket	Graphite	Asbestos Free
Stem	Brass	BS EN 12164: CW603N (ASTM B16-C36000 H02)
Bonnet	Grey Iron	BS EN 1561 EN-GJL-250
Bonnet Gasket	Graphite	Asbestos Free
Wedge Nut	Bronze	BS EN 1982 (CC491K)
Wedge	Grey Iron	BS EN 1561 EN-GJL-250
Wedge facing ring	Bronze	BS EN 1982 (CC491K)
Body Seat Ring	Bronze	BS EN 1982 (CC491K)
Body	Grey Iron	BS EN 1561 EN-GJL-250

DIMENSIONAL DRAWING

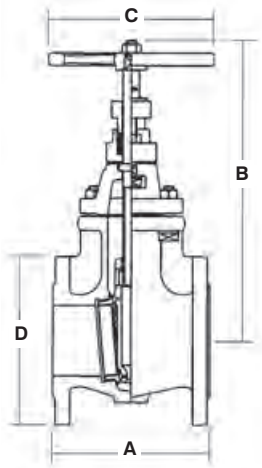

PRESSURE/ TEMPERATURE RATING

BS EN 1171:2002 PN10
10 bar at -10 to 120ºC
7.4 bar at 230ºC

TEST PRESSURES

Each valve is individually hydrostatically tested to BS EN 12266:Part 1 at the following test pressures:
Shell: 15 bar
Seat: 11 bar

SPECIFICATION

Complies with BS EN 1171:2002.
Face-to-face dimensions to BS EN 558-1 series 14.
Flanged to BS EN 1092-2 PN10.
Inside screw.
Non-rising stem.
Bronze trim.

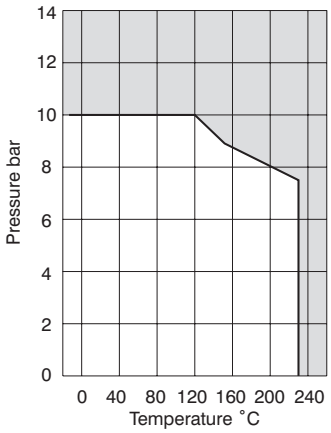

DIMENSIONS & WEIGHTS

Nom Size	mm	50	65	80	100	125	150
A	mm	178	190	203	229	254	267
B	mm	276	295	336	368	427	469
C	mm	140	140	152	203	229	229
D	mm	165	185	200	220	250	285
Weight	kg	14	17	22	30	41	47

Every effort has been made to ensure that the information contained in this publication is accurate at the time of publishing. Hattersley Ltd assumes no responsibility or liability for typographical errors or omissions or for any misinterpretation of the information within the publication and reserves the right to change without notice.

280521

Hattersley®
Technical Helpline UK: 0845 604 1790 MEA: +971 4 816 5800
Email UK: tech-enquiries@hattersley.com
MEA: mena-techenquiries@hattersley.com

Fig. M541
Cast Iron

IV

FEATURES & BENEFITS

- Cast Iron with integral flanges
- Inside screw pattern with non-rising stem
- Bronze trim
- Ideal for use for non-corrosive and reasonably clean services

MATERIAL SPECIFICATION

Component	Material	Specification BS EN
Body	Grey Iron	BS EN 1561 EN-JL 1040 (EN-GJL-250)
Bonnet	Grey Iron	1561 EN-JL1040
Disc	Grey Iron	1561 EN-JL1040
Body Seat Ring	Bronze	1982 (CC491K)
Disc Seat Ring	Bronze	1982 (CC491K)
Stem	Stainless Steel	970: 410S21
Gasket	Graphite	Graphite (Asbestos Free)
Gland Packing Nut	Stainless Steel	970: 304S31
Handwheel	Grey Iron	1561 EN-JL1040
Stem Retaining Ring	Stainless Steel	970: 304S31
Disc Stem Nut	Bronze	1982 (CC491K)
Packing Ring	Graphite	Graphite (Asbestos Free)
Handwheel Retaining Nut	Steel	4190 GR4
Handwheel Washer	Steel	4320
Body ID Plate (Not Shown)	Aluminium	-

DIMENSIONAL DRAWING

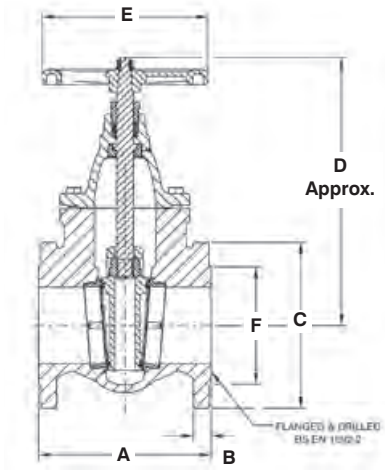

PRESSURE/ TEMPERATURE RATING

16 bar at -10 to 120° C
12.8 bar at 200°C

TEST PRESSURES (HYDRAULIC)

Shell: 24 bar
Seat: 17.6 bar

SPECIFICATION

Complies with BS EN 1171:2002.
Face-to-face dimensions to BS EN 558-1.
Flanged to BS EN 1092-2 PN16.
Wedge disc.
Non-rising stem.
Inside screw.
Handwheel operated.
Grey iron body and wedge with bronze seat.

OPTIONAL FEATURES

Flanges undrilled.

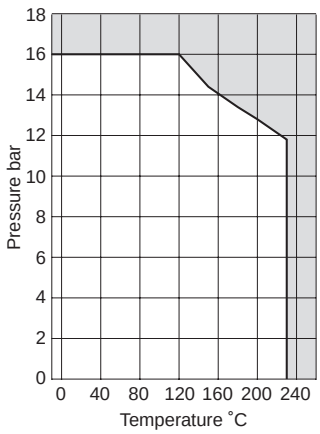

DIMENSIONS & WEIGHTS

Nom Size	mm	50	65	80	100	125	150	200	250	300
A	mm	178	190	203	229	254	267	292	330	356
B	mm	20	20	22	24	26	28	30	32	32
C	mm	165	185	200	220	250	285	340	405	460
D	mm	322	262	286	356	426	463	578	697	788
E	mm	190	190	190	220	300	300	350	400	400
F	mm	99	118	132	156	184	211	266	319	370
Weight	kg	20	18.7	23.9	37.6	50.7	63.8	104.3	169.6	241.6

120121

Every effort has been made to ensure that the information contained in this publication is accurate at the time of publishing. Hattersley Ltd assumes no responsibility or liability for typographical errors or omissions or for any misinterpretation of the information within the publication and reserves the right to change without notice.

Fig. M544
Ductile Iron

IV

FEATURES & BENEFITS

- Hattersley Ductile Iron gate valves offer the ultimate in dependable service wherever minimum pressure drop is important
- Outside screw pattern with rising stem
- Ideal for use on more active media where fluid might have an adverse effect on thread
- Rising stem gives visual indication of valve open position
- Each valve is hydrostatically tested to BS EN 12266-1: 2003
- Manufactured in accordance with BS EN 1171: 2002

MATERIAL SPECIFICATION

Component	Material	Specification BS EN
Handwheel	Ductile Iron	1563 EN-GJS-450-10
Yoke Sleeve	Bronze	-
Yoke (125 to 300mm)	Ductile Iron	1563 EN-GJS-450-10
Yoke Joint (125 to 300mm)	Asbestos Free	-
Gland	Cast iron body and wedge with Brass or Bronze seat	12164 CW712R or 1982 CC491K
Gland Packing	Expanded Graphite	- -
Stem	Steel	EN10087
Stem Cone Bush	Brass	12164 CW614N
Bonnet	Ductile Iron	1563 EN-GJS-450-10
Bonnet Gasket	Asbestos Free	-
Wedge Nut	Bronze	-
Wedge	Ductile Iron	1563 EN-GJS-450-10
Wedge Facing Ring	Bronze	1563 EN-GJS-450-10
Body Seat Ring	Bronze	BS EN 1982 CC491K
Body	Ductile Iron	1563 EN-GJS-450-10

DIMENSIONAL DRAWING

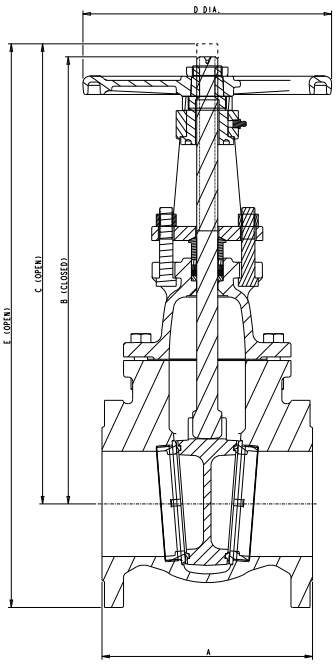

DIMENSIONS & WEIGHTS

Nom Size	mm	65	80	100	125	150	200	250	300
A	mm	190	203	229	254	267	292	330	356
B	mm	347	380	453	540	612	779	944	1081
C	mm	426	473	570	683	782	1000	1218	1412
D	mm	190	190	220	300	300	350	400	400
E	mm	519	573	680	808	925	1170	1416	1635
Weight	kg	21.4	26.7	40.6	58.8	72.6	123.2	202.3	282.9

PRESSURE/ TEMPERATURE RATING

BS EN 1171 PN16
16 bar at -10 to 120ºC
11.8 bar at 230ºC

TEST PRESSURES (HYDRAULIC)

Shell: 24 bar
Seat: 17.6 bar

SPECIFICATION

Ductile Iron Gate Valve, Bronze Trim, Rising SS Stem, in accordance with BS EN 1171:2002. PN16 Rated. End flanges conform to BS EN 1092-2 with raised face. DN65 - DN125 Category 1, DN150 - DN300 Category 2. The valve is suitable for use on Group 2 gases, Group 1 Liquids and Group 2 Liquids, as defined by the Pressure Equipment Directive 2014/68/EU and Pressure Equipment Safety Regulations 2016 with its amendments in 2019.

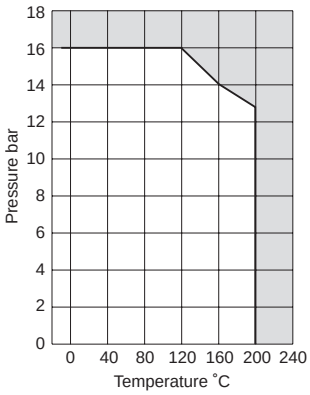

Every effort has been made to ensure that the information contained in this publication is accurate at the time of publishing. Hattersley Ltd assumes no responsibility or liability for typographical errors or omissions or for any misinterpretation of the information within the publication and reserves the right to change without notice.

170823

Hattersley®
Technical Helpline UK: 0845 604 1790 MEA: +971 4 816 5800
Email UK: tech-enquiries@hattersley.com
MEA: mena-techenquiries@hattersley.com

Fig. M540
Ductile Iron

IV

FEATURES & BENEFITS

- Ductile Iron with integral flanges
- Inside screw pattern with non-rising stem
- Ideal for use for non-corrosive and reasonably clean services
- Seat rings are threaded and securely fixed into the body

MATERIAL SPECIFICATION

Component	Material	Specification BS EN	Specification ASTM
Body	Ductile Iron	1563 EN JS1050	
Bonnet	Ductile Iron	1563 EN JS1050	
Stem	Al Bronze	12163 CW301G	B150 C64200
Handwheel	Cast Iron	1561 EN JL1030	
Gland Flange	Ductile Iron	1561 EN JS1050	
Gland	H T Brass	1561 EN JS1040	
Gland Packing	Expanded Graphite	-	
Stuffing Box	Ductile Iron	1561 EN JS1050	
Stuffing Box Gasket	Asbestos Free	-	
Bonnet Gasket	Asbestos Free	-	
Wedge Nut	Al Bronze	12163 CW301G	B150 C64200
Wedge	Ductile Iron	1563 EN JS1050	
Wedge Facing Ring	Bronze	-	
Body Seat Ring	Bronze	-	

DIMENSIONAL DRAWING

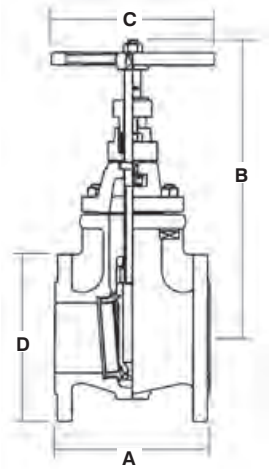

PRESSURE/ TEMPERATURE RATING

BS EN 1171:2002 PN25
25 bar at -10 to 120ºC
DN300: 110°C Max

TEST PRESSURES (HYDRAULIC)

PN25
Shell: 37.5 bar
Seat: 27.5 bar

SPECIFICATION

Inside screw.

Non-rising stem.

Flanged to BS EN 1092-2 PN25.

Bronze trim.

Ductile iron body and wedge with bronze seat.

All products classified in accordance with Pressure Equipment Directive 2014/68/EU, and Pressure Equipment (Safety) Regulations 2016, as amended.

DN50-250:Suitable for use on Group 2 Gas, Group 1 & Group 2 Liquids.

DN300:Suitable for use on Group 2 Liquids only, and limited to 110°C.

None suitable for use on Group 1 Liquids or unstable liquids.

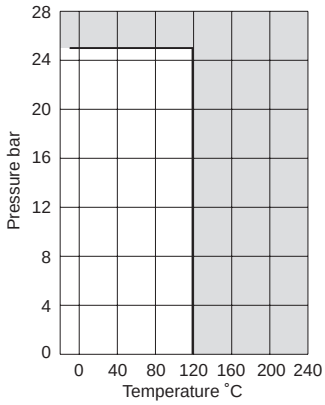

DIMENSIONS & WEIGHTS

Nom Size	mm	50	65	80	100	125	150
A	mm	178	190	203	229	254	267
B	mm	322	322	340	420	477	542
C	mm	190	190	190	305	305	305
D	mm	165	185	200	235	270	300
Weight	kg	16	19	24	35	45	62

230922

Every effort has been made to ensure that the information contained in this publication is accurate at the time of publishing. Hattersley Ltd assumes no responsibility or liability for typographical errors or omissions or for any misinterpretation of the information within the publication and reserves the right to change without notice.

Fig. 501
Cast Iron

IV

FEATURES & BENEFITS

- Cast Iron with integral flanges
- Inside screw pattern with non-rising stem
- Ideal for use for non-corrosive and reasonably clean services
- Seat rings are threaded and securely fixed into the body

MATERIAL SPECIFICATION

Component	Material	Specification	
		BS EN	ASTM
Handwheel	Cast Iron	1561 EN-JLI030	A126 CI B
Gland	Cast Iron	1561 EN-JLI030	A126 CI B
Gland Packing	Graphite	-	
Stuffing Box	Cast Iron	1561 EN-JLI030	A126 CI B
Stuffing Box Gasket	Graphite	-	
Stem	Copper Alloy	12164 CW603N	B16 C36000
Bonnet	Cast Iron	1561 EN-JLI040	A126 CI B
Bonnet Gasket	Graphite	-	
Wedge Nut	Bronze	1982 CC491K	B62 C83600
Wedge	Cast Iron	1561 EN-JLI040	A126 CI B
Wedge Facing Ring	Bronze	1982 CC491K	B62 C83600
Body Seat Ring	Bronze	1982 CC491K	B62 C83600
Body	Cast Iron	1561 EN-JLI040	A126 CI B

DIMENSIONAL DRAWING

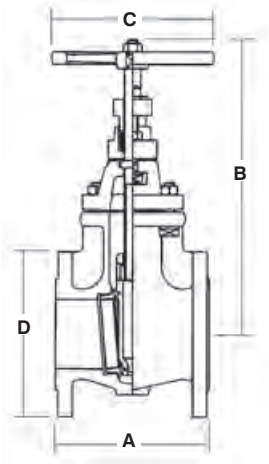

PRESSURE/ TEMPERATURE RATING

13.8 bar at -10 to 65ºC
8.6 bar at 232ºC

TEST PRESSURES

Each valve is individually hydrostatically tested to MSS SP-70 at the following test pressures.
Shell: 24.1 bar
Seat: 15.2 bar

SPECIFICATION

Face to face dimensions.

ANSI B16.10 & basic BS EN 558-2 Series 3.

Inside screw.

Flanged to ANSI B16.1 Class 125 and BS 1560 3.2.

Bronze trim.

Cast iron body and wedge with bronze seat.

Generally complies with MSS SP-70 Class 125 and BS5150 ANSI 125.

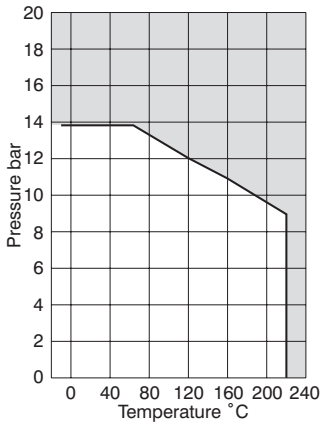

DIMENSIONS & WEIGHTS

Nom Size	in	2	2 1/2	3	4	5	6	8	10	12
A	in	7	7 1/2	8	9	10	10 1/2	11 1/2	13	14
B	in	11	12 1/2	13 1/2	15 1/4	18	20	25	29	35
C	in	7	7	8	10	12	12	14	16	18
D	in	6	7	7 1/2	9	10	11	13 1/2	16	19
Weight	kg	20	25	29	48	65	80	126	179	205

Every effort has been made to ensure that the information contained in this publication is accurate at the time of publishing. Hattersley Ltd assumes no responsibility or liability for typographical errors or omissions or for any misinterpretation of the information within the publication and reserves the right to change without notice.

120121

Hattersley®
Technical Helpline UK: 0845 604 1790 MEA: +971 4 816 5800
Email UK: tech-enquiries@hattersley.com
MEA: mena-techenquiries@hattersley.com

Fig. 504
Ductile Iron

IV

FEATURES & BENEFITS

- Ductile Iron with integral flanges
- Outside screw pattern with rising stem
- Ideal for use on more active media where fluid might have an adverse affect on thread
- Flanges ends require no pipe threading

MATERIAL SPECIFICATION

Component	Valve Size	Material	Specification BS EN	Specification ASTM
Handwheel	2" - 12"	Cast Iron	1561 EN-JL1040	A126 Class B
Handwheel	14" - 24"	Ductile Iron	1563 EN-JS1040	A126 Class B
Handwheel Nut	All	Ductile Iron	1563 EN-JS1040	A126 Class B
Yoke Bushing	2" - 12"	Bronze	1982 CC491K	B62 C83600
Yoke Bushing	14" - 24"	Brass	12164 CW603N	B16 C36000
Yoke	2" - 5"	Part of Bonnet		
Yoke	6" - 12"	Cast Iron	1561 EN-JL1040	A126 Class B
Yoke	14" - 20"	Ductile Iron	1563 EN-JS1040	A126 Class B
Yoke	24"	Ductile Iron	1563 EN-JS1050	A536 80-55-06
Gland Flange	2" - 12"	Cast Iron	1561 EN-JL1040	A126 Class B
Gland Flange	14" - 20"	Ductile Iron	1563 EN-JS1040	A126 Class B
Gland Flange	24"	Ductile Iron	1563 EN-JS1050	A536 80-55-06
Gland	2" - 12"	Part of Gland Flange		
Gland	14" - 24"	Brass	12164 CW603N	B16 C36000
Gland Packing	All	Graphite	-	-
Stem	All	Brass	12164 CW603N	B16 C36000
Bonnet	2" - 12"	Cast Iron	1561 EN-JL1040	A126 Class B
Bonnet	14" - 20"	Ductile Iron	1563 EN-JS1040	A126 Class B
Bonnet	24"	Ductile Iron	1563 EN-JS1050	A536 80-55-06
Bonnet Gasket	All	SS + Graphite	-	-
Wedge	2" - 12"	Cast Iron	1561 EN-JL1040	A126 Class B
Wedge	14" - 24"	Ductile Iron	1563 EN-JS1040	A126 Class B
Wedge Facing Ring	All	Bronze	1982 CC491K	B62 C83600
Body Seat Ring	All	Bronze	1982 CC491K	B62 C83600
Body	2" - 12"	Cast Iron	1561 EN-JL1040	A126 Class B
Body	14" - 20"	Ductile Iron	1563 EN-JS1040	A126 Class B
Body	24"	Ductile Iron	1563 EN-JS1050	A536 80-55-06

DIMENSIONAL DRAWING

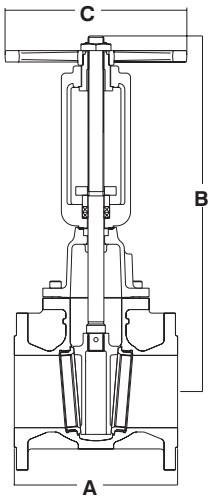

PRESSURE/ TEMPERATURE RATING

BS EN 1092-2 Class 125
2" to 12": 13.8 Bar -10 to 65°C; 8.6 bar at 230°C
14" to 24":10.3 Bar -10 to 65°C; 8.9 Bar at 110°C

TEST PRESSURES

Each valve is individually hydrostatically tested to MSS SP-70 at the following test pressures.
Shell: 24.1 bar
Seat: 15.2 bar

SPECIFICATION

BS 5150:1990 ANSI 125.
Face to face dimensions ANSI B16.10.
Outside screw.
Rising stem.
Bronze trim.
Ductile iron body and wedge with bronze seat.
Flanged to ANSI B16.1 Class 125.
Generally complies with MSS SP-70 Class 125.
All products classified in accordance with Pressure Equipment Directive 2014/68/EU, and Pressure Equipment (Safety) Regulations 2016, as amended.
2" to 12": Suitable for use on Group 2 Gas, Group 1 & Group 2 Liquids.
14" to 24":Suitable for use on Group 2 Liquids only, and limited to 110°C.
None suitable for use on Group 1 Liquids or unstable liquids.

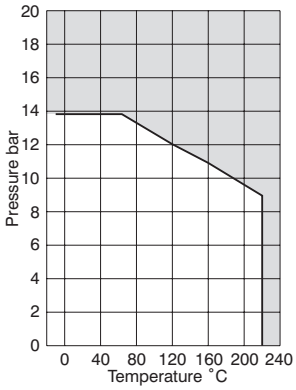

DIMENSIONS & WEIGHTS

Nom Size	in / mm	2 / 50	2½ / 65	3 / 80	4 / 100	5 / 125	6 / 150	8 / 200	10 / 250	12 / 300	14 / 350	16 / 400	18 / 450	20 / 500	24 / 600
A	mm	178	190	208	229	254	267	292	330	366	381	406	432	457	508
B (Open)	mm	405	415	486	632	710	842	1100	1228	1373	1595	1900	2210	2600	2650
C	mm	191	191	191	305	305	305	305	400	457	508	558	610	610	760
Weight	kg	24	26	29	50	71	88	136	198	268	310	440	530	655	780

230922

Every effort has been made to ensure that the information contained in this publication is accurate at the time of publishing. Hattersley Ltd assumes no responsibility or liability for typographical errors or omissions or for any misinterpretation of the information within the publication and reserves the right to change without notice.

Project: Blackfriars Railway Station, London

Sector: Infrastructure

Distributor: BSS Kings Cross

Contractor: BBESL

Specification: A range of Hattersley valves including Hook-Up with Autoflow, General Isolating Valves, Strainers, Non-Return Valves and Commissioning Valves.

S Shand-Brown

Hattersley®

Technical Helpline UK: 0845 604 1790 MEA: +971 4 816 5800
Email UK: tech-enquiries@hattersley.com
MEA: mena-techenquiries@hattersley.com

Gland Cocks/Drain Taps

Fitting Hattersley's Drain Taps and Gland Cocks enable systems to be drained without removing pipework. They prevent the build up of sediment that flows through the pipework thus extending its life expectancy.

Fig. No.	PN Rating	End Connections	Size Range	Body Material
370*	16	Threaded Inlet	1/2 - 1"	Bronze
371*	16	Threaded Inlet	1/2 - 1"	Bronze
81HU	10	Male Hose Union	3/8 - 2"	Bronze

*WRAS approved product

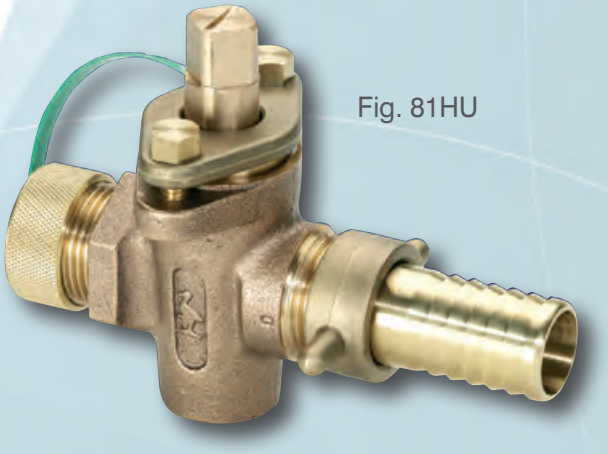

Fig. 81HU

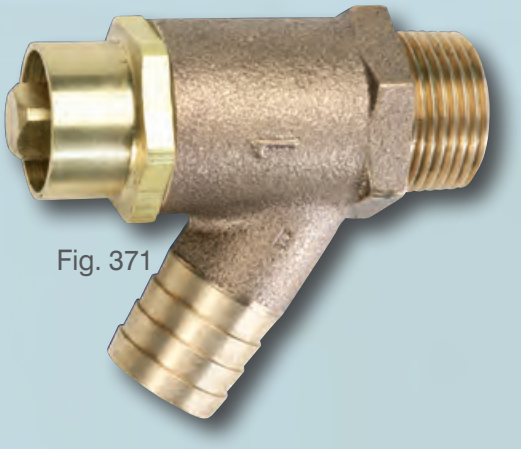

Fig. 371

141119

Hattersley®

Technical Helpline UK: 0845 604 1790 MEA: +971 4 816 5800
Email UK: tech-enquiries@hattersley.com
MEA: mena-techenquiries@hattersley.com

Fig. 371
DZR Brass Draining Tap

WRAS APPROVED PRODUCT

DOC

FEATURES & BENEFITS

- Integrated shroud gives a tamper resistant design
- DZR Brass draining taps are suitable for use on hot and cold water up to 16bar, at temperatures up to 110°C
- Enables system to be drained without removing pipework
- The inlet is a threaded taper male connection to BS EN 10226-2
- The outlet is ribbed for hose connection
- WRAS Approved up to 85°C

MATERIAL SPECIFICATION

No.	Name	Material
1	Body	DZR Brass BS EN 12165 CW602N
2	Stem	Brass BS EN 12164 CW614N
3	Bonnet	Brass BS EN 12164 CW614N
4	Disc Holder	Brass BS EN 12164 CW614N
5	Rubber Seat	EP80 (EPDM- WRAS Approved)
6	Stem Packing	EP70 (EPDM- WRAS Approved)
7	Nut (1" Only)	Brass BS EN 12164 CW614N

PRESSURE/ TEMPERATURE RATING

Suitable for pressures of 16 bar up to a maximum temperature of 110°C.

DIMENSIONS & WEIGHTS

Nom Size	in	1/2	3/4	1
A	mm	53.5	64	74.8
B	mm	7.0	7.0	7.0
C	mm	7.4	8.5	9.5
D	mm	9.5	11.3	11.3
E	mm	55.9	68.3	82.3
F	mm	50.7	61.7	73.7
Weight	kg	0.13	0.26	0.59

DIMENSIONAL DRAWING

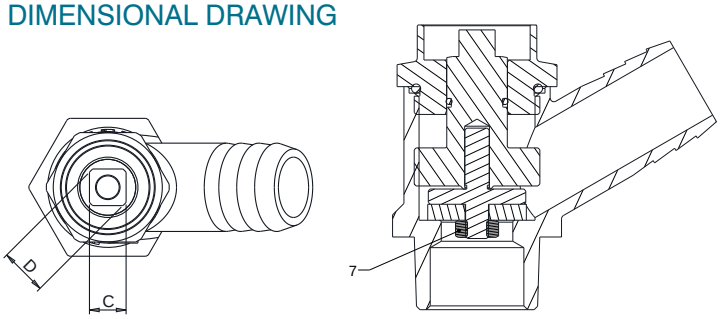

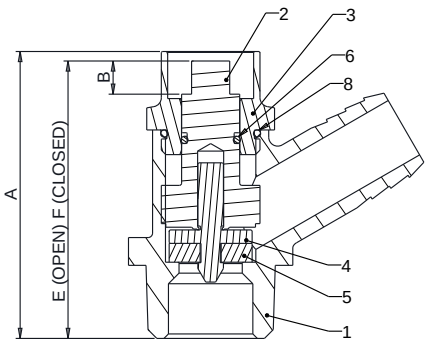

280621

Every effort has been made to ensure that the information contained in this publication is accurate at the time of publishing. Hattersley Ltd assumes no responsibility or liability for typographical errors or omissions or for any misinterpretation of the information within the publication and reserves the right to change without notice.

Fig. 370
DZR Brass Draining Tap

WRAS APPROVED PRODUCT

DOC

FEATURES & BENEFITS

- DZR Brass draining taps are suitable for use on hot and cold water up to 16bar, at temperatures up to 120°C
- Enables system to be drained without removing pipework
- The inlet is a threaded taper male connection to BS EN 10226-2
- The outlet is ribbed for hose connection
- WRAS Approved up to 85°C

MATERIAL SPECIFICATION

No.	Name	Material
1	Body	DZR Brass BS EN 12165 CW602N
2	Stem	Brass BS EN 12164 CW614N
3	Bonnet	Brass BS EN 12164 CW614N
4	Disc Holder	Brass BS EN 12164 CW614N
5	Rubber Seat	EP80 (EPDM- WRAS Approved)
6	Stem Packing	EP70 (EPDM- WRAS Approved)
7	Nut (1" Only)	Brass BS EN 12164 CW614N

PRESSURE/ TEMPERATURE RATING

Suitable for pressures of 16 bar up to a maximum temperature of 120°C.

DIMENSIONS & WEIGHTS

Nom Size	in	1/2	3/4	1
A	mm	43.5	53.5	65.6
B	mm	7.0	7.0	7.0
C	mm	7.4	8.5	9.5
D	mm	9.5	11.3	11.3
E	mm	59.9	68.3	82.3
F	mm	50.7	61.7	73.7
Weight	kg	0.13	0.26	0.59

DIMENSIONAL DRAWING

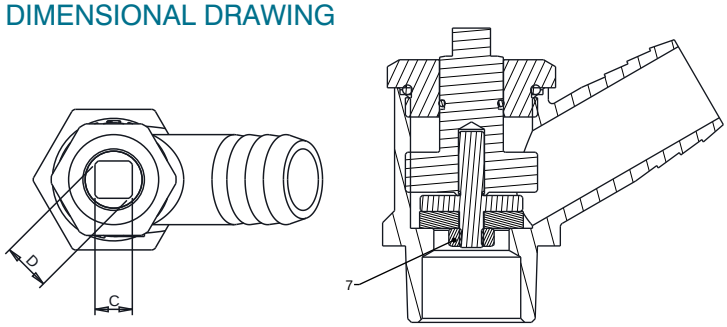

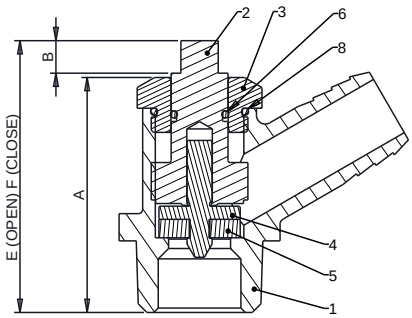

Every effort has been made to ensure that the information contained in this publication is accurate at the time of publishing. Hattersley Ltd assumes no responsibility or liability for typographical errors or omissions or for any misinterpretation of the information within the publication and reserves the right to change without notice.

290621

Hattersley®

Technical Helpline UK: 0845 604 1790 MEA: +971 4 816 5800
Email UK: tech-enquiries@hattersley.com
MEA: mena-techenquiries@hattersley.com

Fig. 81HU
Bronze Hose Union

DOC

FEATURES & BENEFITS

- Enables system to be drained without removing pipework
- Prevents build-up of sediment
- Extends life expectancy of pipework

MATERIAL SPECIFICATION

Component	Material	Specification	
		BS EN	ASTM
Gland (1/2" to 1")	Brass	12165 CW617N	B124 Alloy 2
Gland (1 1/4" to 2")	Bronze	1982 CC491K	B62
Gland Packing	Asbestos Free	-	
Plug	Bronze	1982 CC491K	B62
Cap and Tail	Brass	12164 CW614N	B455-385
Body	Bronze	1982 CC491K	B62

DIMENSIONAL DRAWING

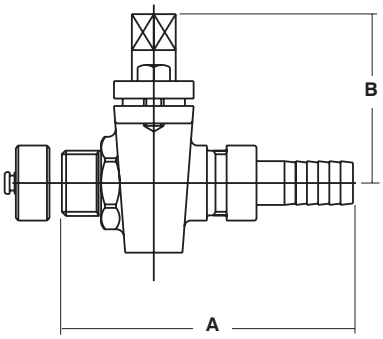

PRESSURE/ TEMPERATURE RATING

10 bar 0 to 120ºC

TEST PRESSURES (HYDRAULIC)

Body: 20 bar

SPECIFICATION

90º operation.

Sizes 1/2" to 1" supplied complete with cap and strap.

Plugs have square heads with a slot to indicate plug position.

Malleable iron levers available on request.

Malleable iron lever can be pinned to the plug head at extra charge.

Taper threaded BS EN 10226 (ISO 7-1) formerly BS 21.

Figure 81HU Gland Cocks are not suitable for gas service.

DIMENSIONS & WEIGHTS

Nom Size	in	3/8	1/2	3/4	1	1 1/4	1 1/2	2
A	mm	102	93	117	145	184	203	240
B	mm	54	54	64	79	90	100	170
MI Lever No.		**Y2**	**D2**	**D3 1/2**	**D4 1/2**	**Y6**	**Y7**	**X**
Weight	kg	0.35	0.38	0.67	1.2	1.5	2.5	4.14

MALLEABLE IRON LEVERS

MI Lever No.	Y1	Y2	D2	D3 1/2	D4 1/2	Y6	Y7
Square size mm	8.7	9.5	10.3	13.5	15.9	15.9	19.1

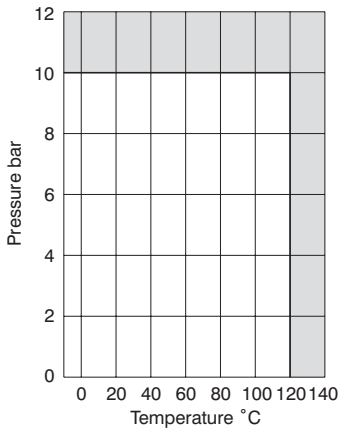

131119

Every effort has been made to ensure that the information contained in this publication is accurate at the time of publishing. Hattersley Ltd assumes no responsibility or liability for typographical errors or omissions or for any misinterpretation of the information within the publication and reserves the right to change without notice.

Globe Valves

Hattersley globe valves are highly efficient for throttling service because seat and disc designs provide flow characteristics with proportionate relationships between valve lift and flow rate. This assures accurate flow control/ regulation. Globe valve bodies are normally of spherical shape, ensuring maximum strength against line pressures and pipeline strains. Wide faced hexagon ends on threaded valves provide a firm wrench grip which prevents damage to the valve.

The majority of Hattersley globe valves are inside screw pattern, having either a screwed bonnet or union bonnet configuration. A wide choice of disc and seat materials is offered in this range to enable the user to select a valve most suited for the intended service.

There are five basic seat and disc arrangements available:

1. Metal to metal: the seat being integral with the body.
2. Renewable alloy or stainless steel disc and seat.
3. Renewable composition or elastomeric disc.
4. Renewable composition elastomeric disc alloy seat.
5. Vee-Reg pattern stainless steel disc and seat giving protection against wire drawing on steam service.

Fig. 5N

Fig. No.	PN / ANSI Rating	End Connection	Size Range	Disc Material	Body Material	Operator
C4	16	Threaded	1/2 - 2"	Brass (1/2 - 1") Bronze (1 1/4 - 2")	Bronze	Handwheel
5	32	Threaded	1/2 - 2"	Brass (1/2 - 1") Bronze (1 1/4 - 2")	Bronze	Handwheel
5N	32	Threaded	1/4 - 1"	Brass	Bronze	Handwheel
5NLS	32	Threaded	1/4 - 1"	Brass	Bronze	Lockshield
13	32	Threaded	1/4 - 2"	PTFE	Bronze	Handwheel
23	40	Threaded	1/4 - 2"	Stainless Steel	Bronze	Handwheel
17	16	Flanged	15 - 50mm	PTFE	Bronze	Handwheel
731	16	Flanged	50 - 300mm	Cast Iron	Cast Iron	Handwheel

120121

Hattersley®
Technical Helpline UK: 0845 604 1790 MEA: +971 4 816 5800
Email UK: tech-enquiries@hattersley.com
MEA: mena-techenquiries@hattersley.com

Fig. C4
Bronze

IV

FEATURES & BENEFITS

- High quality bronze body with robust spherical shape
- Rising stem and screwed bonnet
- Assures accurate flow regulation/control
- Suitable for high pressures up to 16 bar

MATERIAL SPECIFICATION

Component	Material	Specification	
		BS EN*	ASTM
Body	Bronze	1982 CC490K	B584 C84400
Bonnet	Bronze	1982 CC490K	B584 C84400
Disc 1/2" to 1"	Brass	12164 CW603N	B16 C63000
Disc 1 1/4" to 2"	Bronze	1982 CC490K	B584 C84400
Stem	Brass	12164 CW603N	B16 C36000
Handwheel	Aluminium Alloy	-	B 85-03
Gland Nut	Brass	12164 CW603N	B16 C36000
Gland Follower	Brass	12164 CW603N	B16 C36000
Gland Packing	PTFE	-	-

* Nearest BS EN equivalent to ASTM grade

DIMENSIONAL DRAWING

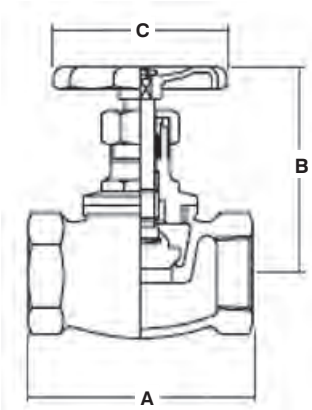

PRESSURE/ TEMPERATURE RATING

16 bar from -10 to 100°C
7 bar at 170°C

TEST PRESSURES (PNEUMATIC)

Each valve is individually hydrostatically tested to BS 5154 at the following test pressures.

Shell: 24 bar
Seat: 17.6 bar

SPECIFICATION

Rising stem.

Threaded bonnet.

Metal disc.

Bronze body with integral seat and brass or bronze disc (depending on size).

Taper thread BS EN 10226.

Available with NPT thread (C4AT) subject to minimum quantities.

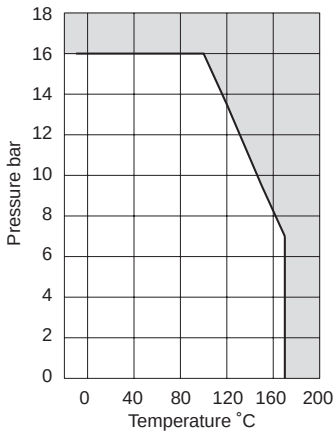

DIMENSIONS & WEIGHTS

Nom Size	in	1/2	3/4	1	1 1/4	1 1/2	2
A	mm	49	56	65	75	84	99
B	mm	70	70	87	94	104	124
C	mm	53	58	64	74	74	87
Weight	kg	0.26	0.35	0.55	0.72	1.01	1.54

120121

Every effort has been made to ensure that the information contained in this publication is accurate at the time of publishing. Hattersley Ltd assumes no responsibility or liability for typographical errors or omissions or for any misinterpretation of the information within the publication and reserves the right to change without notice.

Fig. 5
Bronze

IV

FEATURES & BENEFITS

- High quality bronze body with robust spherical shape
- Rising stem and screwed bonnet
- Assures accurate flow regulation/control
- Suitable for high pressures up to 32 bar

MATERIAL SPECIFICATION

Component	Material	Specification	
		BS EN	ASTM
Body	Bronze	1982 CC491K	B62 C83600
Disc (1/2" to 1")	Brass	12165 CW617N	B124 C37700
Disc (1 1/4" to 2")	Bronze	1982 CC491K	B62 C83600
Stem	Brass	12164 CW617N	B455 C38000
Bonnet	Bronze	1982 CC491K	B62 C83600
Stem Packing	Teflon	PTFE	
Packing	PTFE	-	
Handwheel	Aluminium	-	
Gland Nut	Brass	12164 CW614N	B455 C38500
Lock Nut	Brass	12164 CW614N	B455 C38500

DIMENSIONAL DRAWING

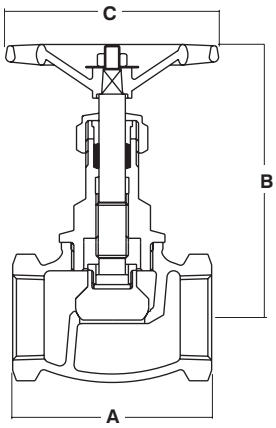

DIMENSIONS & WEIGHTS

Nom Size	in	1/2	3/4	1	1 1/4	1 1/2	2
A	mm	60	74	86	99	109	130
B (Open)	mm	92	108	118	137	162	166
C	mm	70	76	82	94	101	119
Weight	kg	0.4	0.5	0.9	1.4	1.7	2.7

PRESSURE/ TEMPERATURE RATING

BS 5154 PN32 Series B
32 bar from -10 to 100ºC
14 bar at 198ºC

TEST PRESSURES (PNEUMATIC)

Shell: 6 bar
Seat: 6 bar

SPECIFICATION

Rising stem, bronze body with integral seat, screwed bronze bonnet and brass disc (depending on size).

Available with NPT threads to ASTM B1.20.1.

Taper threaded BS EN 10226 (ISO 7-1) formerly BS 21.

BS 5154.

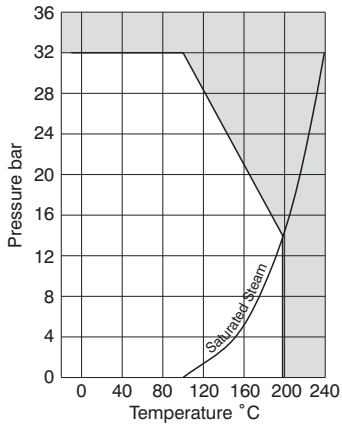

Every effort has been made to ensure that the information contained in this publication is accurate at the time of publishing. Hattersley Ltd assumes no responsibility or liability for typographical errors or omissions or for any misinterpretation of the information within the publication and reserves the right to change without notice.

120121

Hattersley®
Technical Helpline UK: 0845 604 1790 MEA: +971 4 816 5800
Email UK: tech-enquiries@hattersley.com
MEA: mena-techenquiries@hattersley.com

Fig. 5N & 5NLS
Bronze Needle

IV

FEATURES & BENEFITS

- High quality bronze body with robust spherical shape
- Rising stem and screwed bonnet
- Assures accurate flow regulation/control
- Suitable for high pressures up to 32 bar
- Lock Shield (LV) variant prevents accidental or unwanted operation

MATERIAL SPECIFICATION

Component	Material	Specification	
		BS EN	ASTM
Body	Bronze	1982 CC491K	B62 C83600
Stem	Brass	12164 CW617N	B124 Alloy 2
Stem Packing	Teflon	PTFE	
Bonnet	Cast Bronze	1982 CC491K	B62 C83600
Packing Nut	Brass	12164 CW614N	B455 C38500
Handwheel	Aluminium	-	
Identification Plate	Aluminium	-	
Handwheel Nut	Brass	12164 CW614N	B455 C38500

DIMENSIONAL DRAWINGS

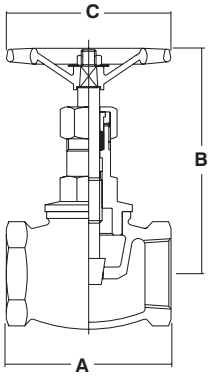

Fig. 5N

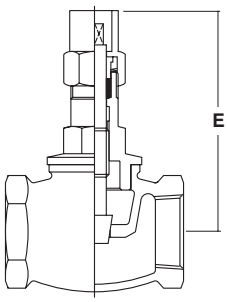

Fig. 5NLS

DIMENSIONS & WEIGHTS

Nom Size	in	1/4	3/8	1/2	3/4	1
A	mm	51	51	60	74	86
B (Open)	mm	72	72	92	108	118
C	mm	57	57	68	75	82
E	mm	75	75	95	111	121
Lockshield key	Fig.	391	391	391	391	391
	Ref	IP	IP	IP	IP	IP
Weight	kg	0.2	0.2	0.4	0.6	0.9

PRESSURE/ TEMPERATURE RATING

BS 5154: 1991 PN32 Series B
32 bar from -10 to 100ºC
14 bar at 198ºC

TEST PRESSURES (PNEUMATIC)

Shell: 6 bar
Seat: 6 bar

SPECIFICATION

Rising stem, Bronze body with integral seat, screwed bronze bonnet and brass disc (depending on size).

Taper threaded BS EN 10226 (ISO 7-1) formerly BS 21.

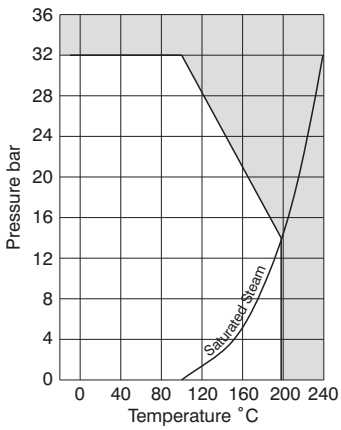

120121

Every effort has been made to ensure that the information contained in this publication is accurate at the time of publishing. Hattersley Ltd assumes no responsibility or liability for typographical errors or omissions or for any misinterpretation of the information within the publication and reserves the right to change without notice.

Fig. 23
Bronze

IV

FEATURES & BENEFITS

- High quality bronze body with robust spherical shape
- Rising stem and union bonnet
- Assures accurate flow regulation/control
- Suitable for high pressures up to 40 bar

MATERIAL SPECIFICATION

Component	Material	Specification	
		BS EN	ASTM
Body	Bronze	1982 CC491K	B62 C83600
Bonnet	Bronze	1982 CC491K	B62 C83600
Stem	Man Bronze	12164 CW721R	B138C67500
Disc	316 St. Steel	-	
Handwheel	Aluminium	-	
Gland	Brass	12164 CW614N	
Packing	Non Asbestos	-	
Union Ring	Bronze	1982 CC491K	B62 C83600
Disc Stem Ring	Man Bronze	12164 CW721R	B138C67500
Body Seat Ring	13% Cr St	10088 X12Cr13	A276 410
Lock Washer	Brass	2870	CZ 123
Packing Nut ($^1/_4$" to $1^1/_2$")	Brass	12164	CW721R
Packing Nut 2"	Bronze	1982 CC491K	
Handwheel Nut	Brass	12164 CW614N	
Identification Plate	Aluminium	-	

DIMENSIONAL DRAWING

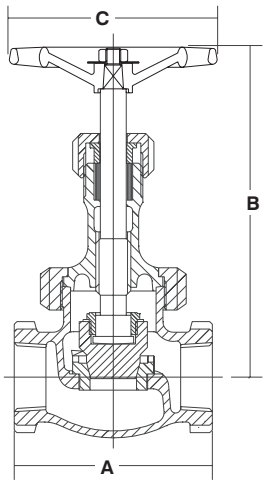

PRESSURE/ TEMPERATURE RATING

PN40
40 bar from -10 to 120ºC
17.5 bar at 260ºC

TEST PRESSURES (HYDRAULIC)

Shell: 60 bar
Seat: 44 bar

SPECIFICATION

BS 5154:1991.
Bronze body.
316 stainless steel disc.
Rising stem.
Union bonnet.
Taper threaded BS EN 10226 (ISO 7-1) formerly BS 21.
Available with NPT threads to ASTM B1.20.1.

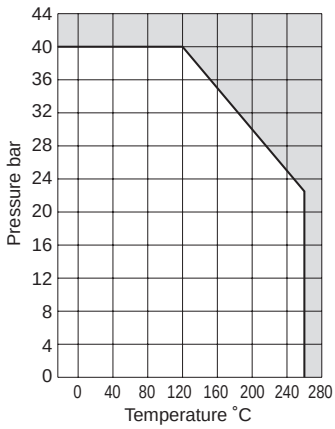

DIMENSIONS & WEIGHTS

Nom Size	in	$^1/_4$	$^3/_8$	$^1/_2$	$^3/_4$	1	$1^1/_4$	$1^1/_2$	2
A	mm	59	59	68	81	95	108	121	146
B	mm	126	126	142	154	173	201	225	255
C	mm	76	76	81	94	100	119	139	150
Weight	kg	0.56	0.55	0.8	1.24	1.82	2.73	3.78	6.03

Every effort has been made to ensure that the information contained in this publication is accurate at the time of publishing. Hattersley Ltd assumes no responsibility or liability for typographical errors or omissions or for any misinterpretation of the information within the publication and reserves the right to change without notice.

120121

Hattersley®
Technical Helpline UK: 0845 604 1790 MEA: +971 4 816 5800
Email UK: tech-enquiries@hattersley.com
MEA: mena-techenquiries@hattersley.com

Fig.17
Bronze

FEATURES & BENEFITS

- High quality bronze body with robust spherical shape
- Rising stem and screwed bonnet
- Assures accurate flow regulation/control
- Integral flanges require no pipe threading

MATERIAL SPECIFICATION

Component	Material	Specification	
		BS EN	ASTM
Body	Bronze	1982 CC491K	B62 C83600
Disc Stem Ring	Man Bronze	12164 CW721R	B138 C67500
Packing	Asbestos Free	-	
Gland	Brass	12164 CW614N	
Packing Nut	Brass	12164 CW614N	
Washer	Brass	12164 CW614N	
Disc Retaining Nut	Brass	12164 CW614N	
Handwheel	Aluminium	-	
Handwheel Nut	Brass	12164 CW614N	
Identification Plate	Aluminium	-	
Bonnet	Bronze	1982 CC491K	B62 C83600
Stem	Brass	12164	CW721R
Disc	PTFE	-	
Disc Holder	Bronze	1982 CC491K	B62 C83600

DIMENSIONAL DRAWING

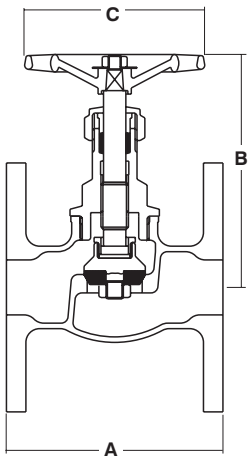

DIMENSIONS & WEIGHTS

Nom Size	mm	15	20	25	32	40	50
A	mm	80	90	100	110	120	135
B	mm	101	119	130	155	172	196
C	mm	70	80	95	95	105	120
D	mm	95	105	115	140	150	165
E	mm	6.0	6.0	8.0	8.0	9.0	11.0
Weight	kg	1.24	1.76	2.30	2.82	5.22	5.71

PRESSURE/ TEMPERATURE RATING

BS 5154: 1991 PN16 Series B
16 bar from -10 to 100ºC
7 bar at 170ºC

TEST PRESSURES (HYDRAULIC)

Shell: 24 bar
Seat: 17.6 bar

SPECIFICATION

Rising stem.
Screwed bonnet.
Renewable glass filled PTFE disc.
Conical seat disc (15 to 50mm).
Flanged to BS EN 1092-3.
Also available with flanges drilled to BS10 Table E and F and ANSI from PN16 flanges.
Face to face dimensions of all valves are to PN16 detail.

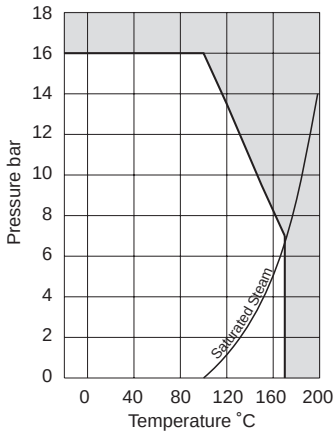

Every effort has been made to ensure that the information contained in this publication is accurate at the time of publishing. Hattersley Ltd assumes no responsibility or liability for typographical errors or omissions or for any misinterpretation of the information within the publication and reserves the right to change without notice.

120121

Fig.731
Cast Iron

IV

FEATURES & BENEFITS

- Valve body is made of high grade cast iron and has integral flanges
- Supplied with asbestos free gland packing and gaskets
- Outside screw pattern with rising stem
- Ideal for use on more active media where fluid might have an adverse effect on thread

MATERIAL SPECIFICATION

Component	Material	Specification	
		BS EN	ASTM
Handwheel	Cast Iron	1561 EN-JL1030	A126 CIB
Yoke Bush	Bronze	1982 CC491K	B62 C83600
Stem	Brass	12164 CW603R	B16 C36000
Gland Flange	Ductile Iron	1563 EN-JS1030	A536 65-45-12
Gland Follower	Bronze	1982 CC491K	B62 C83600
Gland Packing	Graphite	-	
Bonnet	Cast Iron	1561 EN-JL1040	A126 CIB
Bonnet Gasket	Graphite	-	
Disc Stem Nut	Bronze	1982 CC491K	B62 C83600
Disc	Cast Iron	1982 CC491K	B62 C83600
Disc Seat Ring	Bronze	1982 CC491K	B62 C83600
Body Seat Ring	Bronze	1982 CC491K	B584 C83600
Body	Cast Iron	1561 EN-JL1040	A126 CIB

DIMENSIONAL DRAWING

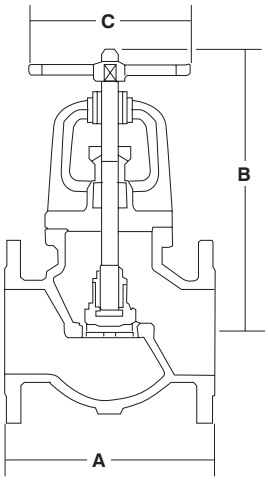

PRESSURE/ TEMPERATURE RATING

16 bar from -10ºC to 95ºC

TEST PRESSURES (HYDRAULIC)

Shell: 24 bar
Seat: 17.6 bar

SPECIFICATION

BS EN 13789:2010.
Face to face dimensions BS EN 588-1 basic series 10.
Cast iron body and bonnet.
Outside screw, rising stem.
Bronze trim.
Sizes DN125 to DN300 have a centre guided disc.
Handwheel operated.
Flanged to BS EN 1092-2 PN16.
Also available flanged BS 5152 ANSI 125 Figure 731 ANSI.

DIMENSIONS & WEIGHTS

Nom Size	mm	50	65	80	100	125	150	200	250	300
A	mm	203	216	241	292	330	356	495	622	698
B (Open)	mm	259	300	318	402	419	479	537	667	838
C	mm	178	178	200	254	300	300	348	405	455
Weight	kg	16	21	26	44	62	83	141	226	344

Every effort has been made to ensure that the information contained in this publication is accurate at the time of publishing. Hattersley Ltd assumes no responsibility or liability for typographical errors or omissions or for any misinterpretation of the information within the publication and reserves the right to change without notice.

131119

Hattersley®
Technical Helpline UK: 0845 604 1790 MEA: +971 4 816 5800
Email UK: tech-enquiries@hattersley.com
MEA: mena-techenquiries@hattersley.com

Project: The Place (next to The Shard), London

Sector: Commercial

Distributor: Pipe Center

Contractor: D G Robson

Specification: Hook-Ups, general isolating valves (15mm to 400mm), strainers, non-return valves, DPCVs, commissioning valves and WRAS approved valves. Orifice plates M2000, isolation 970G - 100 - 100EXT - 100C - DPCV - Gas - 971.

S Shand-Brown

Hattersley®

Technical Helpline UK: 0845 604 1790 MEA: +971 4 816 5800
Email UK: tech-enquiries@hattersley.com
MEA: mena-techenquiries@hattersley.com

Project: Leadenhall, London
Sector: Commercial
Distributor: BSS
Contractor: Crown House
Specification: General valves, commissioning valves, strainers, non-return valves.

S Shand-Brown

Pressed for Time…

Hattersley™

...Look no

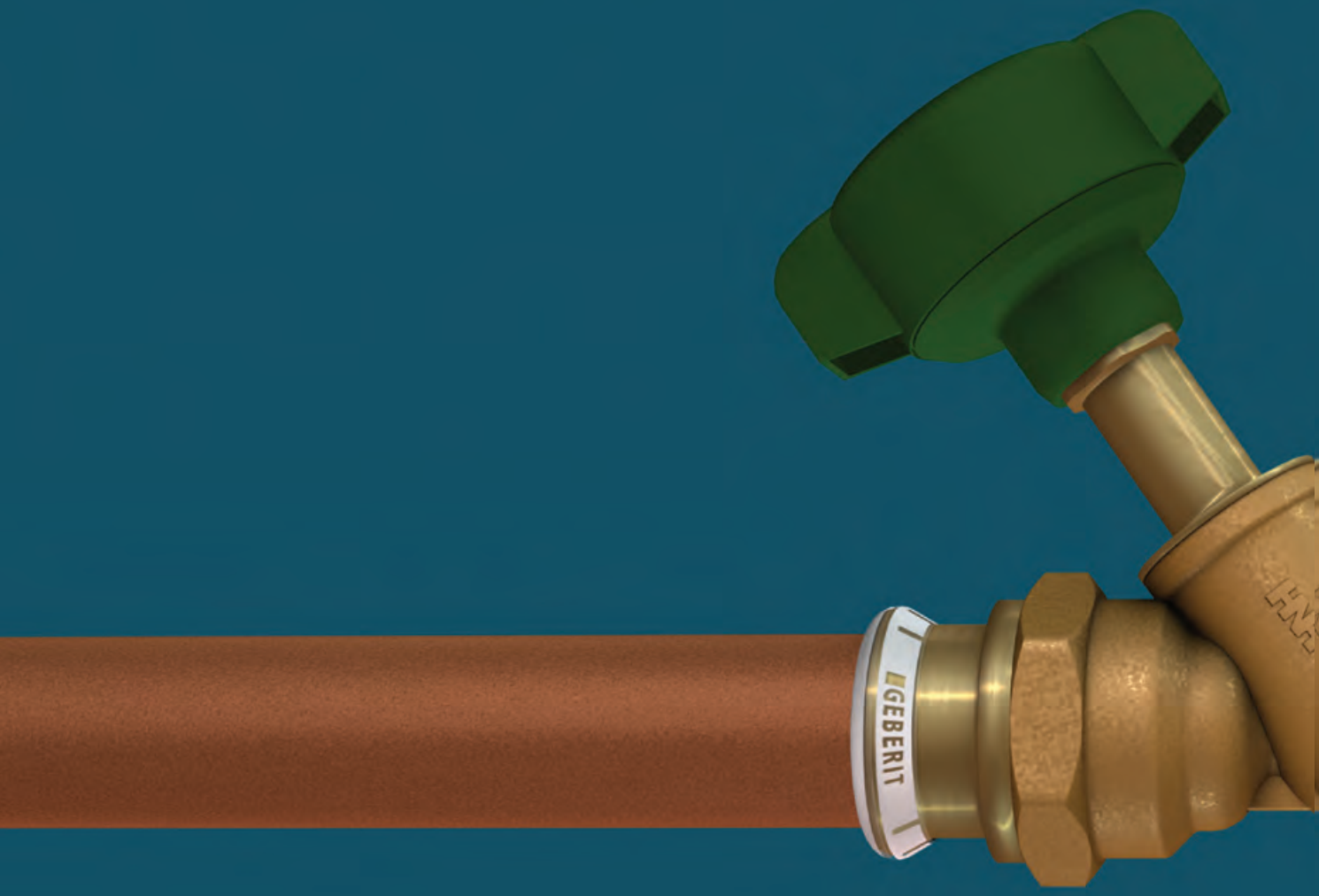

PRESS-FIT

USING PROVEN GEBERIT

Further

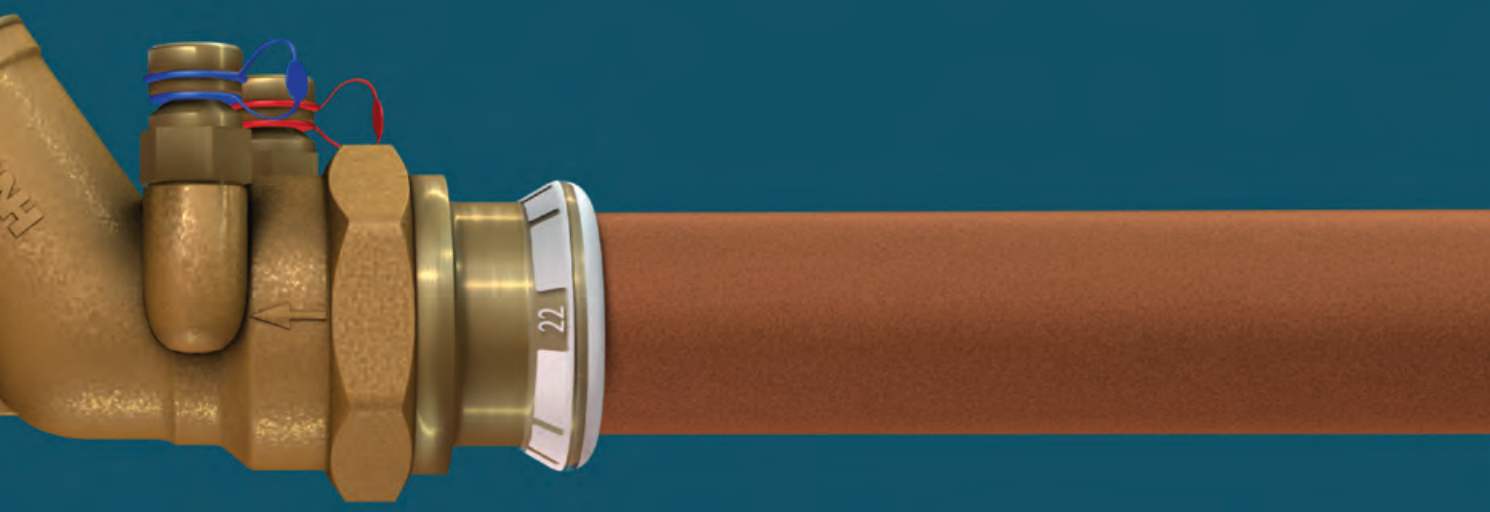

VALVES

MAPRESS TECHNOLOGY

Hattersley has designed a dedicated core range of Press-Fit valves, which are quickly and easily installed into pipework using proven Geberit Mapress technology. Without compromising on reliability, a clean pressed joint is simpler and quicker to make than traditional soldered or threaded connections.

Press-Fit Valves
Maximum Performance Benefits

An Outstanding Pedigree

Hattersley and Geberit have been trading for nearly 100 years and bring together their expertise in creating innovative, quality products and solutions that have been used by specifiers, consultants and contractors around the world.

Designed for the Perfect Fit

Whilst the valves still incorporate the same features & benefits as the trusted Hattersley General Valves range, both the fittings and valves have redesigned parallel connecting threads to ISO 228-1.

Pre-assembled & Fewer Joints

Valves come already fitted with Geberit Mapress connectors – so there is just one integral unit. For the fitter, the benefits are huge; the number of joints to make on-site is dramatically reduced and the performance, exact dimensions & tolerances of the Press-Fit Valve are known in advance. This is ideal for pre-fabricators who can pre-cut pipework with confidence.

Thoroughly Tested

Each Press-Fit valve undergoes the standard 6 bar air underwater test. Hattersley also used bend and vibration tests to EN331 and DVGW respectively during development to test the integrity of the fitting.

Geberit Mapress Technology - Peace of Mind

All Press-Fit Valves come with a unique white end cap, which has a size indicator, and ensures that the product is protected from any ingress of material prior to installation. In addition, innovative 'green foil' indicators which surround the pressing contours of the connectors are designed to fall off after pressing with a Press-Fit Tool. This enables unpressed joints to be clearly visible before the pressure test. As a further safety enhancement, Press-Fit valves feature defined leak paths, which if unpressed, will cause controlled leakage and be immediately identified during initial testing.

Copper

Stainless Steel

Carbon Steel

Application - Adapting to Variety

Designed for both new-build and refurbishment projects, Press-Fit valves can be installed on a variety of pipe materials. In addition to any brand of copper tubing conforming to BS EN 1057 R220 soft copper (12-22mm), R250 semi-hard coppper (12-28mm) and R290 hard copper (12-54mm), the valves can also be pressed onto Geberit Mapress Stainless and Carbon Steel.

The Core Range

Hattersley Press-Fit Valves are available in sizes up to 2" for Ball Valves, Balancing Valves, Check Valves and Strainers.

301122

Hattersley®

Technical Helpline UK: 0845 604 1790 MEA: +971 4 816 5800
Email UK: tech-enquiries@hattersley.com
MEA: mena-techenquiries@hattersley.com

A unique end cap has a size indicator and ensures the product is protected from any ingress prior to installation. 1

Valves are PN16 rated and suitable for temperatures -10 to 120°C. Valve is assembled with press-fit ends. 2

End connectors are full bore, maintaining valve performance. 3

Valves & fittings have the advantage of redesigned parallel threads to enhance thread engagement and to ensure the valves pass DVGW vibration and EN 331 bend tests. 4

Green foil indicators which surround the pressing contours provide a visual indicator of a pressed joint. 9

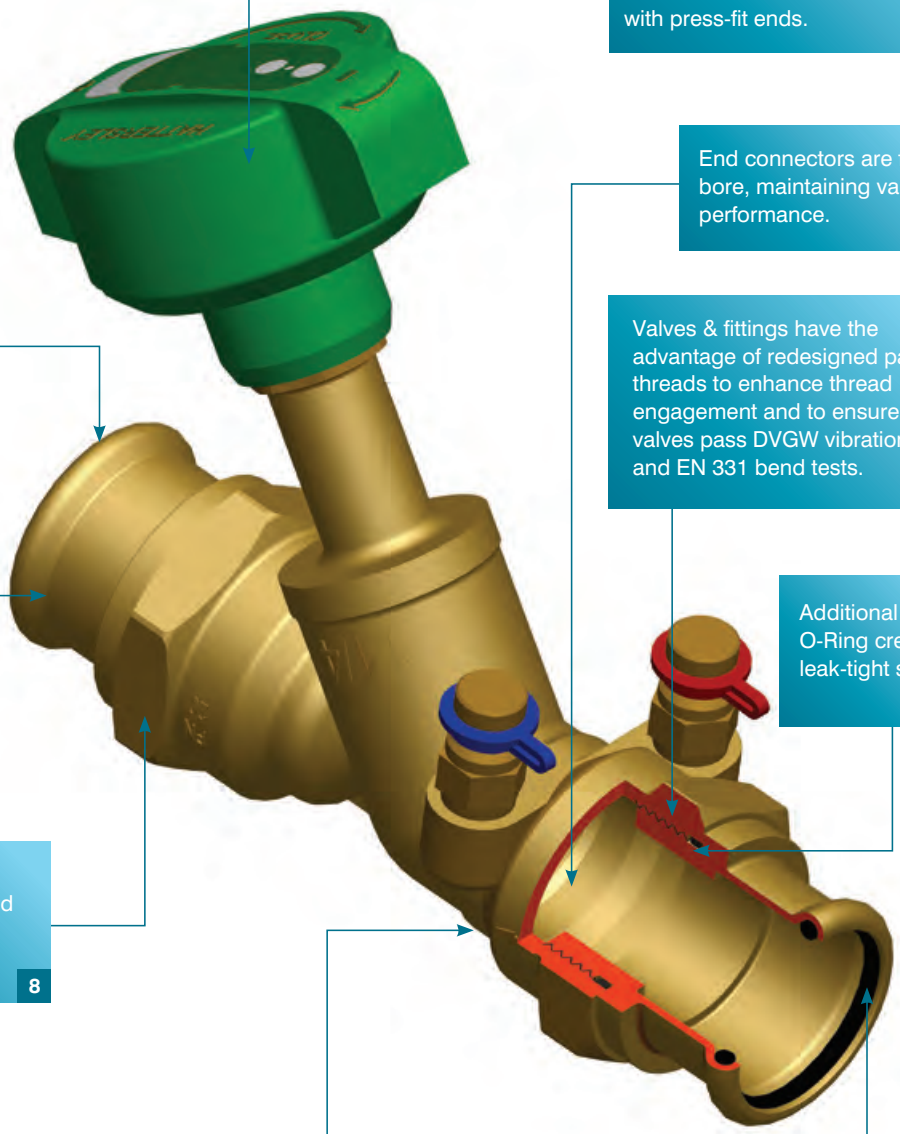

Additional O-Ring creates leak-tight seal. 5

Valves are supplied pre-assembled & factory tested so the number of joints to make on-site is reduced. 8

Exact dimensions, tolerances and performance of entire unit is known in advance. 7

O-Ring features defined leak paths - a 'fail safe' against unpressed joints. 6

See website for Press-Fit video

301122

Fig. 1432.PF
Bronze Double Regulating Valve

WRAS APPROVED PRODUCT

DRV

FEATURES & BENEFITS

- Double regulating valve complete with Press-Fit connectors
- Provides precise and accurate flow regulation
- Supplied as one integral unit means less joints to make on-site
- The performance, exact dimensions and tolerances are known in advance
- Incorporates both Hattersley and proven Geberit Mapress technology
- Vibration tested to DVGW and bend tested to BS EN331
- Quickly and easily installed using a Press-Fit tool (supplied by others)

MATERIAL SPECIFICATION

No.	Component	Material	Specification
1	Body	Bronze	BS EN 1982 CC49IK
2	Bonnet - 1/2" - 1 1/4"	DZR Brass	BS EN 12165 CW602N
	Bonnet - 1 1/2" - 2"	Bronze	BS EN 1982 CC491K
3	Stem	DZR Brass	BS EN 12165 CW602N
4	Disc	DZR Brass	BS EN 12165 CW602N
5	Disc Retaining Ring (Sizes 1-2" only)	DZR Brass	BS EN 12165 CW602N
6	Balancing Cone	DZR Brass	BS EN 12165 CW602N
7	Drive Sleeve	Brass	BS EN 12164 CW617N
8	Drive Sleeve Retaining Clip	Carbon Spring Steel	DIN7993 SIZE 018
9	Handwheel Retaining Screw	Brass	BS EN 12164 CW617N
10	Disc Face (Sizes 1-2" only)	PTFE	-
11	Hattersley Handwheel	Plastic	-
12	Memory Stop Screw	HT Steel	-
13	O-Ring Seal	EPDM Rubber	WRAS Approved
14	Identification Plate	Polycarbonate	-
15	Press-Fit Connector	Bronze	BS EN 1982 CC499K
16	Connector O-Ring	CIIR Butyl Rubber	-
17	Joint O-Ring	EPDM Rubber	WRAS Approved

Fig. 1432.PF

Fig. 1432.PF Pressed

DIMENSIONAL DRAWINGS

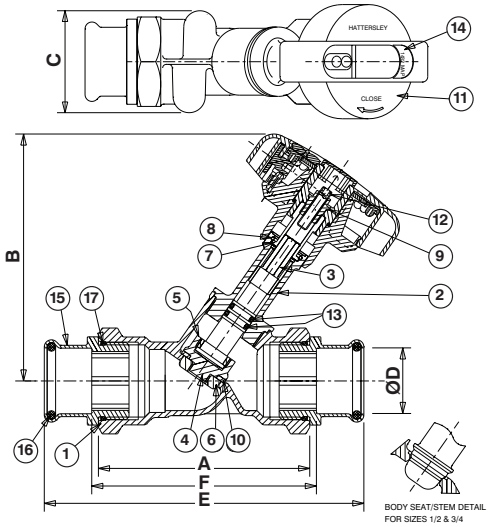

DIMENSIONS & WEIGHTS

Fig. No.	Size (mm)	Dimensions (mm) A	B	C	ØD	E	F	Weight (Kg)
Fig.1432.PF	1/2 x 15	87	110	46	15	132	93	0.636
Fig.1432L.PF	1/2 x 18	87	110	46	15	132	93	0.640
Fig.1432.PF	3/4 x 22	96	111	51	22	147	106	0.718
	1 x 28	100	132	56	28	152	107	1.066
	1 1/4 x 35	114	133	57	35	172	121	1.354
	1 1/2 x 42	125	148	61	42	193	134	1.816
	2 x 54	146	149	75	54	227	158	2.412

Standard flow coefficients of Fig.1432 and Fig.1432L are still valid.

TEMPERATURE RANGE

-10 to 120°C (max)
WRAS approval is for cold water only -10 to 23°C.

OPTIONS

Available in standard flow (Fig.1432.PF) and low flow (Fig.1432L.PF)

SPECIFICATION

Bronze (BS EN 1982 CC491K) 'Y' Pattern Globe Type Double Regulating Valve giving modified equal percentage performance with characterised throttling disk and authority sufficient to regulate flow in circuits incorporating flow measurement devices.

Double regulating feature set by Allen Key and valve operation by Microset handwheel security seals.

Disk with PTFE insert on sizes 1" and above. Conforms to BS7350 for flow regulation.

Complete with Geberit Mapress bronze Press-Fit adaptors.

Rated PN16.

Every effort has been made to ensure that the information contained in this publication is accurate at the time of publishing. Hattersley Ltd assumes no responsibility or liability for typographical errors or omissions or for any misinterpretation of the information within the publication and reserves the right to change without notice.

260822

Hattersley®
Technical Helpline UK: 0845 604 1790 MEA: +971 4 816 5800
Email UK: tech-enquiries@hattersley.com
MEA: mena-techenquiries@hattersley.com

Fig. 1732.PF
Bronze Fixed Orifice Double Regulating Valve

WRAS APPROVED PRODUCT

FOCS

FEATURES & BENEFITS

- Fixed Orifice Double regulating valve complete with Press-Fit connectors
- Provides precise and accurate flow regulation & measurement
- Supplied as one integral unit means less joints to make on-site
- The performance, exact dimensions and tolerances are known in advance
- Incorporates both Hattersley and proven Geberit Mapress technology
- Vibration tested to DVGW and bend tested to BS EN331
- Quickly and easily installed using a Press-Fit tool (supplied by others)

Fig. 1732.PF

MATERIAL SPECIFICATION

No.	Component	Material	Specification
1	Body	Bronze	BS EN 1982 CC49IK
2	Bonnet - 1/2" - 1 1/4"	DZR Brass	BS EN 12165 CW602N
	Bonnet - 1 1/2" - 2"	Bronze	BS EN 1982 CC491K
3	Stem	DZR Brass	BS EN 12165 CW602N
4	Disc (Sizes 1-2" only)	DZR Brass	BS EN 12165 CW602N
5	Disc Retaining Ring (Sizes 1-2" only)	DZR Brass	BS EN 12165 CW602N
6	Balancing Cone	DZR Brass	BS EN 12165 CW602N
7	Drive Sleeve	Brass	BS EN 12164 CW617N
8	Drive Sleeve Retaining Clip	Carbon Spring Steel	DIN7993 SIZE 018
9	Handwheel Retaining Screw	Brass	BS EN 12164 CW617N
10	Disc Face (Sizes 1-2" only)	PTFE	-
11	Hattersley Handwheel	Plastic	-
12	Memory Stop Screw	HT Steel	-
13	O-Ring Seal	EPDM Rubber	WRAS Approved
14	Identification Plate	Polycarbonate	-
15	Orifice Insert	DZR Brass	BS EN 12164 CW602N
16	Fig. 631 Pressure Test Point	DZR Brass	BS EN 12164 CW602N
17	Press-Fit Connector	Bronze	BS EN 1982 CC499K
18	Connector O-Ring	CIIR Butyl Rubber	-
19	Joint O-Ring	EPDM Rubber	WRAS Approved

DIMENSIONAL DRAWINGS

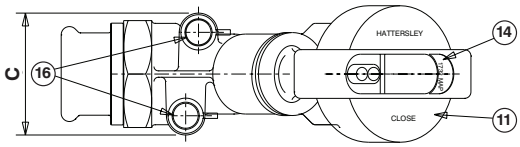

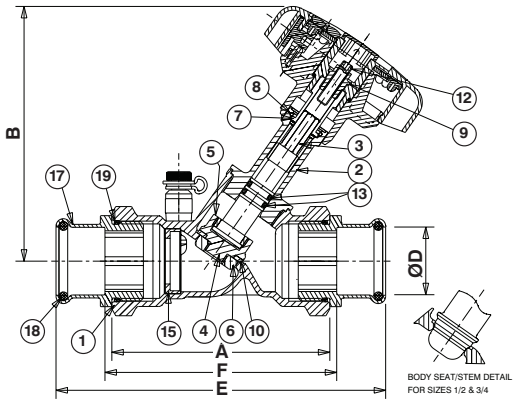

DIMENSIONS & WEIGHTS

Fig. No.	Size (mm)	Dimensions (mm) A	B	C	ØD	E	F	Weight (Kg)
Fig.1732.PF Fig.1732L.PF Fig.1732M.PF	1/2 x 15	87	110	46	15	132	93	0.716
	1/2 x 18	87	110	46	18	133	94	0.720
Fig.1732.PF	3/4 x 22	96	111	51	22	147	106	0.788
	1 x 28	100	132	56	28	152	107	1.136
	1 1/4 x 35	114	133	57	35	172	121	1.434
	1 1/2 x 42	125	148	61	42	193	134	1.906
	2 x 54	146	149	75	54	227	158	2.512

TEMPERATURE RANGE

-10 to 120°C (max)
WRAS approval is for cold water only
-10 to 23°C

OPTIONS

Available in standard flow (Fig.1732.PF), medium flow (Fig.1732M.PF) and low flow (Fig.1732L.PF)

SPECIFICATION

Bronze (BS EN 1982 CC491K) 'Y' Pattern Globe Type Fixed Orifice Double Regulating Valve incorporating integral orifice with corner tappings terminating in Hattersley Fig. 631 test points. Double regulating feature set by Allen Key and valve operation by Microset handwheel. Disk with PTFE insert on sizes 1" and above. The entire unit provides a measurement accuracy of ± 5%.

Conforms to BS7350 for flow measurement and regulation. Complete with Geberit Mapress bronze Press-Fit adaptors. Rated PN16 (Maximum temperature 12°C).

080222

Every effort has been made to ensure that the information contained in this publication is accurate at the time of publishing. Hattersley Ltd assumes no responsibility or liability for typographical errors or omissions or for any misinterpretation of the information within the publication and reserves the right to change without notice.

Fig. 100.PF
DZR Ball Valve

WRAS APPROVED PRODUCT

IV

FEATURES & BENEFITS

- Quarter-turn isolation valve complete with Press-Fit connectors
- Supplied as one integral unit means less joints to make on-site
- The performance, exact dimensions and tolerances are known in advance
- Incorporates both Hattersley and proven Geberit Mapress technology
- Vibration tested to DVGW and bend tested to BS EN 331
- Quickly and easily installed using a Press-Fit tool (supplied by others)
- The Fig. 100.PF Ball Valve is available with a variety of operator options - Extension Stem Lever (Fig.100EXT.PF) and T-handle (Fig.100TH.PF)
- Generally Conforms to BS EN 13547
- WRAS Approved to 85°C

Fig. 100.PF

MATERIAL SPECIFICATION

No.	Component	Material	Specification
1	Body	DZR Brass	BS EN 12165 CW602N
2	Seat	PTFE	WRAS Approved
3	Ball - 1/2" - 1"	DZR Brass	BS EN 12165 CW602N
	Ball - 1 1/4" - 2"	Bronze	BS EN 1982 CC491K
4	Stem	Brass	BS EN 12164 CW602N
5	Handle	Steel	Dacromet Plated
6	Packing Nut	DZR Brass	BS EN 12165 CW617N
7	Packing Gland	PTFE	WRAS Approved
8	O-Ring	EPDM Rubber	WRAS Approved
9	Seat Retainer	DZR Brass	BS EN 12165 CW602N
10	Press-Fit Connector	Bronze	BS EN 1982 CC499K
11	Connector O-Ring	CIIR Butyl Rubber	WRAS Approved
12	Joint O-Ring	EPDM Rubber	WRAS Approved

DIMENSIONAL DRAWING

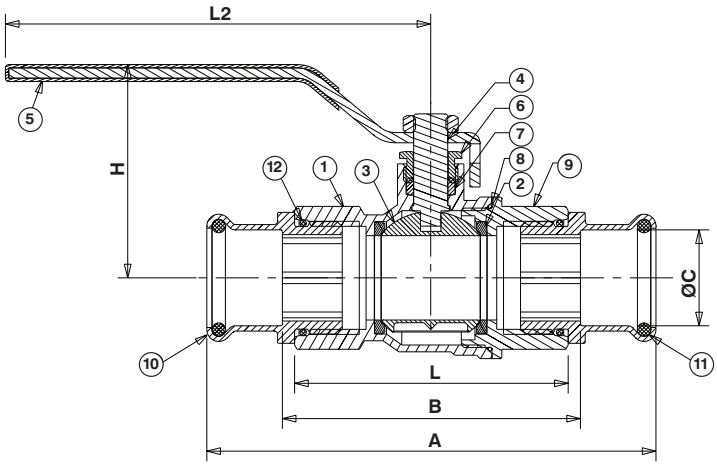

DIMENSIONS & WEIGHTS

Size (mm)	Dimensions (mm)						Weight (Kg)
	L	A	B	ØC	L2	H	
1/2 x 15	59	104	63	15	99	48	0.319
1/2 x 18	59	105	64	18	99	48	0.323
3/4 x 22	67	118	75	22	99	51	0.463
1 x 28	80	132	85	28	125	63	0.728
1 1/4 x 35	94	152	99	35	140	78	1.146
1 1/2 x 42	102	170	102	42	140	84	1.527
2 x 54	124	205	134	54	165	98	2.382

TEMPERATURE RANGE

WRAS to 85°C

OPERATOR

Lever - Fig.100.PF,
Extension stem lever - Fig.100EXT.PF,
Lockshield - Fig.100LS.PF and
T-handle - Fig.100TH.PF

SPECIFICATION

DZR Brass (CW602N) Body Ball Valve, two-piece construction, Floating Chrome Plated DZR(CW602N) Ball, Anti Blow-out stem, PTFE seats, Complete with Geberit Mapress bronze Press-Fit adaptors. Generally conforms to BS EN 13547. PN16 Rated. WRAS approved to 85°C. Suitable for use on Group 2 Gas, Group 1 and Group 2 Liquids as defined by Pressure Equipment Directive 2014/68/EU, and Pressure Equipment (Safety) Regulations 2016, as amended.* Not suitable for use on Group 1 Gases or unstable liquids.

*Information shown is for Fig.100.PF. Options with other operators are available on request.

Every effort has been made to ensure that the information contained in this publication is accurate at the time of publishing. Hattersley Ltd assumes no responsibility or liability for typographical errors or omissions or for any misinterpretation of the information within the publication and reserves the right to change without notice.

030823

Hattersley®

Technical Helpline UK: 0845 604 1790 MEA: +971 4 816 5800
Email UK: tech-enquiries@hattersley.com
MEA: mena-techenquiries@hattersley.com

Fig. 47.PF
Bronze Check Valve

NRV

FEATURES & BENEFITS

- Check valve complete with Press-Fit connectors
- Permits flow in one direction and automatically closes if flow reverses
- Supplied as one integral unit means less joints to make on-site
- The performance, exact dimensions and tolerances are known in advance
- Incorporates both Hattersley and proven Geberit Mapress technology
- Vibration tested to DVGW and bend tested to BS EN 331
- Quickly and easily installed using a Press-Fit tool (supplied by others)

Fig. 47.PF

Fig. 47.PF Pressed

MATERIAL SPECIFICATION

No.	Component	Material	Specification
1	Body	Bronze	BS EN 1982 CC491K
2	Cap	Bronze	BS EN 1982 CC491K
3	Disc - 1/2" - 1"	Brass	BS EN 12164 CW614N
	Disc - 1/4" - 2"	Bronze	BS EN 1982 CC491K
4	Hinge	Bronze	BS EN 1982 CC491K
5	Hinge Pin	Stainless Steel	BS 970 GR316S11
6	Hinge Nut	Brass	BS EN 12164 CW614N
7	Press-Fit Connector	Bronze	BS EN 1982 CC499K
8	Joint O-Ring	EPDM Rubber	WRAS Approved
9	Connector O-Ring	CIIR Butyl Rubber	WRAS Approved

DIMENSIONAL DRAWING

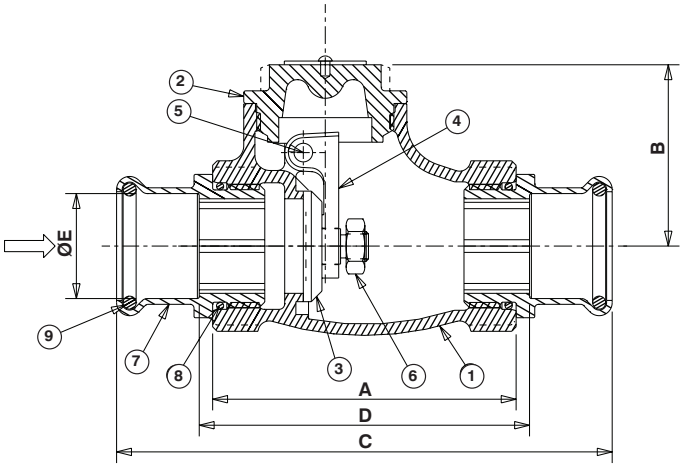

DIMENSIONS & WEIGHTS

Size (mm)	Dimensions (mm)					Weight (Kg)
	A	B	C	D	ØE	
1/2 x 15	59.5	33	104.1	65.1	15	0.42
1/2 x 18	59.5	38	105.5	66.5	18	0.42
3/4 x 22	68.0	42	119.0	78.0	22	0.57
1 x 28	81.5	49	133.1	88.1	28	0.70
1 1/4 x 35	93.2	56	151.6	100.6	35	1.31
1 1/2 x 42	98.3	65	166.5	107.5	42	1.73
2 x 54	110.6	76	191.6	122.6	54	2.65

TEMPERATURE RANGE

-10 to 120°C

SPECIFICATION

Bronze (BS 1982 CC491K) Check Valve, swing type to BS 5154 series 'B'.
Metal disk, free to rotate and hinge pin mounted.
Screwed-in cap. Integral seat.
Complete with Geberit Mapress bronze Press-Fit adaptors.
Rated PN16 (Maximum temperature 120°C).

131119

Every effort has been made to ensure that the information contained in this publication is accurate at the time of publishing. Hattersley Ltd assumes no responsibility or liability for typographical errors or omissions or for any misinterpretation of the information within the publication and reserves the right to change without notice.

Fig. 817.PF
Bronze Strainer

WRAS APPROVED PRODUCT

STR

FEATURES & BENEFITS

- Strainer complete with Press-Fit connectors
- Helps prevent damage to pipeline equipment caused by scale and dirt
- Supplied as one integral unit means less joints to make on-site
- The performance, exact dimensions and tolerances are known in advance
- Incorporates both Hattersley and proven Geberit Mapress technology
- Vibration tested to DVGW and bend tested to BS EN331
- Quickly and easily installed using a Press-Fit tool (supplied by others)

MATERIAL SPECIFICATION

No.	Component	Material	Specification
1	Body	Bronze	BS EN 1982 CC491K
2	Mesh	Stainless Steel	AISI Type 304
3	Cap Seal	PTFE	-
4	Cap	Bronze	BS EN 1982 CC491K
5	Press-Fit Connector	Bronze	BS EN 1982 CC499K
6	Joint O-Ring	EPDM Rubber	WRAS Approved
7	Connector O-Ring	CIIR Butyl Rubber	-

Fig. 817.PF

Fig. 817.PF Pressed

DIMENSIONAL DRAWING

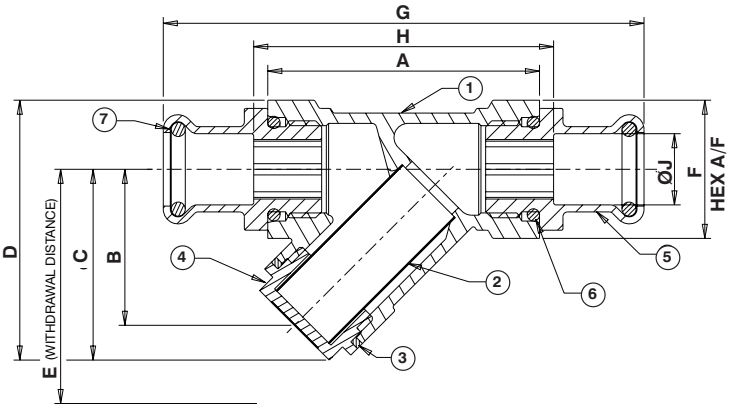

DIMENSIONS & WEIGHTS

Size (mm)	Dimensions (mm)										Weight (Kg)
	Mesh Hole Ø	A	B	C	D	E	F	G	H	ØJ	
1/2 x 15	0.75	58	33	40	55	62	27	103	63	15	0.284
1/2 x 18	0.75	58	33	40	55	62	27	104	64	18	0.290
3/4 x 22	0.75	70	42	54	69	80	33	121	80	22	0.443
1 x 28	0.75	88	48	60	80	93	40	140	95	28	0.612
1 1/4 x 35	1.40	96	55	69	95	108	49	154	103	35	1.064
1 1/2 x 42	1.40	107	61	76	107	118	55	175	117	42	1.416
2 x 54	1.40	126	79	99	135	153	67	207	138	54	2.030

TEMPERATURE RANGE

-10 to 120°C (max)
WRAS approval is for cold water only -10 to 23°C

SPECIFICATION

Bronze (BS EN 1982 CC491K) 'Y' type Strainer.

Fitted with perforated stainless steel screen with 0.75mm holes (1/2" to 1") and 1.40mm holes (1 1/4" to 2").

Machined screen seats in body and cap ends.

Screwed-in cap with captive washer.

Complete with Geberit Mapress bronze Press-Fit adaptors Rated PN16.

Every effort has been made to ensure that the information contained in this publication is accurate at the time of publishing. Hattersley Ltd assumes no responsibility or liability for typographical errors or omissions or for any misinterpretation of the information within the publication and reserves the right to change without notice.

131119

Hattersley®

Technical Helpline UK: 0845 604 1790 MEA: +971 4 816 5800
Email UK: tech-enquiries@hattersley.com
MEA: mena-techenquiries@hattersley.com

Fig. 114.PF Integral Ended Press-Fit Range DZR Ball Valve

WRAS APPROVED PRODUCT

IV

Ball Valves are light, compact units, which are easy to install and operate, giving low flow resistance and 100% bubble tight shut off.

Hattersley WRAS Approved Press-Fit integral ended Ball Valves, are designed for both new-build and refurbishment projects, and can be installed on a variety of pipe materials. The Quarter-turn Bi Directional flow valve is suitable for isolation applications (open or closed)/

FEATURES & BENEFITS

- Quarter-turn full-bore isolation valve complete with integral M-Profile press-fit connectors, for reliable sealing
- O-Ring features define leak paths, to identify unpressed joints
- Press indicators which surround the pressing contours, give visual identification of a pressed joint
- Suitable for hard and half hard tubes to EN 1057, precision carbon steel tubes to EN 10305-3, and precision stainless steel tubes EN 10312, to meet a variety of application requirements
- Quickly and easily installed using a Press-Fit tool, with site labour time reduced by 20% - 25%
- Available in a variety of operators, to meet application requirements
- WRAS Approved to 85°C for use on wholesome (potable) water applications

MATERIAL SPECIFICATION

No.	Component	Material	Specification
1	Body	DZR Brass	BS EN 12165 CW602N
2	Seat Retainer	DZR Brass	BS EN 12165 CW602N
3	Seat	PTFE	WRAS Approved
4	Ball 15mm - 18mm Ball 22mm - 54mm	DZR Brass Chrome Plated Stainless Steel	BS EN 12165 CW602N BS EN 10088-3 gr. 1.4325”
5	Stem	DZR Brass	BS EN 12165 CW602N
6	Lever	Steel	Dacromet Plated
7	Packing Nut	Brass	BS EN 12164 CW617N
8	Packing Gland	PTFE	WRAS Approved
9	O-Ring seal	HNBR	EN682 & WRAS Approved
10	Connnector O-ring	EPDM	EN681-1 & WRAS Approved
11	Hex Nut	Steel	Dacromet Plated
12	Plastic film paper	PVC	-

TEMPERATURE RANGE

-10 to 120°C,
WRAS Approved to 85°C

OPERATOR

Lever - Fig.114.PF,
Extension stem lever - Fig.114EXT.PF,
Lockshield
- Fig.114LS.PF
and T-handle
- Fig.114TH.PF

SPECIFICATION

DZR Brass (CW 602N) bodied end-entry Ball Valve. Full bore. Quarter-turn, Bi Directional flow, lever, extension lever, lockshield or t-handle operated. DZR brass ball chrome plated (15mm - 18mm) and stainless steel ball (22mm - 54mm). PTFE seats, blowout proof stem. Integrated M-Profile Press-Fit ends, featuring visual pressed indicator and ‘fail safe’ O-Ring defined leak paths. Rated PN16, (Maximum temperature 120˚C, WRAS Approved to 85˚C). Suitable for hard and half hard copper tubes to EN 1057, precision carbon steel tubes to EN 10305-3, and precision stainless steel tubes EN 10312.

SYSTEM CONNECTION WARRANTY

Hattersley warrant the system connection on the Fig. 114.PF Press-fit Ball Valves. The joint must be made using the correct M profile press-fit tool (as stated in IOM). The range is approved for use on the following pipework specifications: • Hard R290 copper pipe to BS EN 1057 • Half hard R250 copper pipe to BS EN 1057 • Carbon steel pipe to BS EN 10305-3 • Stainless steel pipe to BS EN 10312.
*Information shown is for Fig.114.PF.
Options with other operators are available on request.

Fig. 114.PF

PRESSURE/TEMPERATURE RATINGS

Temperature (°C)	-10 to 100	120
Pressure (Bar)	16.0	13.5

DIMENSIONAL DRAWING*

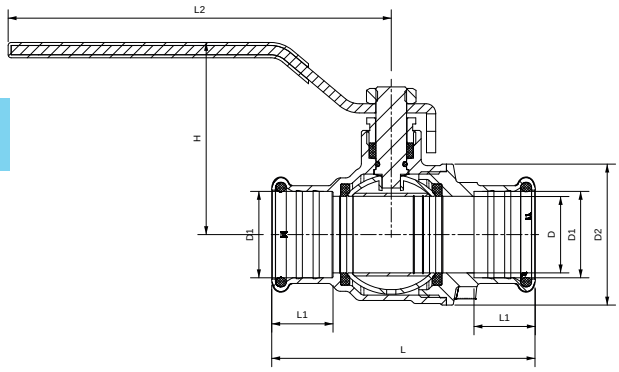

DIMENSIONS & WEIGHTS*

Size (mm)	Dimensions (mm)							Weight (Kg)
	D	D1	D2	L	L1	L2	H	
15 x 15	13.5	15.2	28.5	64.3	18	98.5	48.1	0.169
18 x 18	14.8	18.2	31.5	68.5	18	98.5	49.1	0.206
22 x 22	20	22.2	39	77	20	98.5	52.6	0.259
28 x 28	25	28.2	46	86	20	125	62.7	0.415
35 x 35	32	35.3	57.5	98.5	21	140	79	0.735
42 x 42	39.5	42.3	70	119	27	140	84.8	1.056
54 x 54	50	54.3	88.5	137	28.5	165	98.5	1.757

Every effort has been made to ensure that the information contained in this publication is accurate at the time of publishing. Hattersley Ltd assumes no responsibility or liability for typographical errors or omissions or for any misinterpretation of the information within the publication and reserves the right to change without notice.

08/01/21

Strainers

Scale and dirt in piping systems can cause endless trouble and serious damage to pipeline equipment. Installation of Hattersley strainers will help eliminate the problems caused by foreign matter within piping systems. Generous proportions of Hattersley strainers allow the units to collect significant quantities of foreign matter before pressure losses necessitate cleaning of the basket.

Fig. 817

Fig. No.	PN Rating	End Connection	Size Range	Strainer Screen Material	Screen Hole Size	Free Flow %	Body Material	Fig.631 Test Points
807*	32	Threaded	1/2 - 2"	Stainless Steel	0.75mm	23%	Bronze	No
907*	25	Threaded	1/2 - 2"	Stainless Steel	0.75mm	23%	Bronze	Yes
817*	16	Threaded	1/2 - 2"	Stainless Steel	"0.75mm (1/2 - 1"") 1.4mm (1 1/4 - 2"")"	"50% (1/2 - 1"") 46% (1 1/4 - 2"")"	Bronze	No
822	16	Flanged	50 - 300mm	Stainless Steel	1.5mm	32%	Ductile Iron	No
810	16	Flanged	350 - 600mm	Stainless Steel	3.0mm	40%	Cast Iron (350 -400mm) Ductile Iron (450 - 600mm)	Yes
922	16	Flanged	50 - 300mm	Stainless Steel	1.5mm	32%	Ductile Iron	No
910	16	Flanged	350 - 600mm	Stainless Steel	3.0mm	40%	Cast Iron (350 -400mm) Ductile Iron (450 - 600mm)	Yes
811	25	Flanged	50 - 300mm	Stainless Steel	1.6mm	"33% (50 - 80mm) 40% (100 - 300mm)"	Ductile Iron	No
911	25	Flanged	50 - 300mm	Stainless Steel	1.6mm	"33% (50 - 80mm) 40% (100 - 300mm)"	Ductile Iron	Yes
816W*	16	Flanged	65 - 150mm	Stainless Steel	1.5mm	32%	Cast Iron	No
825W*	25	Flanged	65 - 150mm	Stainless Steel	1.5mm	32%	Ductile Iron	No

*WRAS approved product

120121

Hattersley®
Technical Helpline UK: 0845 604 1790 MEA: +971 4 816 5800
Email UK: tech-enquiries@hattersley.com
MEA: mena-techenquiries@hattersley.com

Fig. 807
Bronze Y-Type

WRAS APPROVED PRODUCT

FEATURES & BENEFITS

- Helps eliminate the problems caused by foreign matter within piping systems
- Perforated stainless steel screen with robust design, low flow resistance and high quality materials
- WRAS approved for use on hot and cold water systems up to 85°C
- 0.75mm screen perforations

MATERIAL SPECIFICATION

Part	Material	Specification BS EN
Body	Bronze	BS EN 1982 CC491K
Cap	Bronze	BS EN 1982 CC491K
Strainer Mesh	Stainless Steel	Type 304
Gasket	Klingersil	C4430
ID Plate	Anodised Aluminium	

PRESSURE/ TEMPERATURE RATING

32 bar from -10 to 200°C

END CONNECTION

UK: TAPER THREADED TO BS EN 10226-2
US: ANSI B1.20.1

SPECIFICATION

Strainers fitted with stainless steel perforated strainer element with 0.75mm diameter holes. Screens fitted into Hattersley Strainers conform to the high standards of materials and workmanship associated with all Hattersley products. This strainer is not suitable for use on group 1 gases, group 2 gases or unstable fluids, as defined by the Pressure Equipment Directive 2014/68/EU.

DIMENSIONAL DRAWINGS

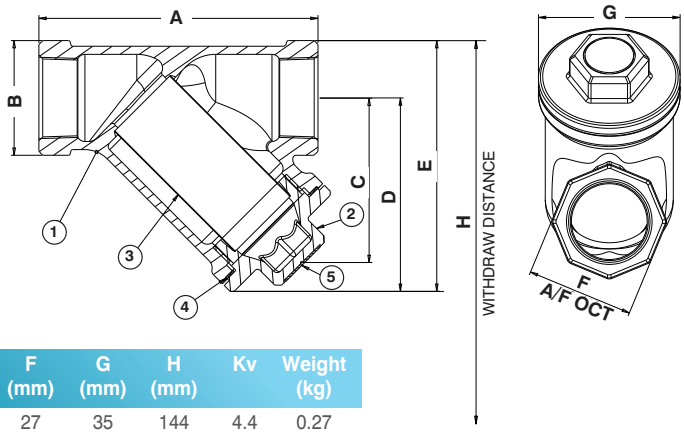

DIMENSIONS & WEIGHTS

Size (in)	A (mm)	B (mm)	C (mm)	D (mm)	E (mm)	F (mm)	G (mm)	H (mm)	Kv	Weight (kg)
1/2	71	29	42	49	63	27	35	144	4.4	0.27
3/4	86	35	51	60	77	33	44	176	9.5	0.44
1	101	45	55	67	90	42	54	202	16.5	0.78
1 1/4	134	54	80	93	120	50	63	294	24.5	1.30
1 1/2	148	63	87	103	134	58	73	322	30.8	1.81
2	176	77	98	119	157	71	93	367	55.6	3.10

PRESSURE/TEMPERATURE RATING

Temperature °C	-10 to 100	130	150	180	200
Pressure (bar)	32	26.5	22.8	17.4	14

Intermediate pressure ratings shall be determined by interpolation

120121

Every effort has been made to ensure that the information contained in this publication is accurate at the time of publishing. Hattersley Ltd assumes no responsibility or liability for typographical errors or omissions or for any misinterpretation of the information within the publication and reserves the right to change without notice.

Fig. 817
Bronze Y-Type

WRAS APPROVED PRODUCT

STR

FEATURES & BENEFITS

- Hattersley strainers will help eliminate the problems caused by foreign matter within piping systems
- Robust and high quality bronze body
- Streamlined flow contours minimise pressure drop
- Compact design with short face to face
- Perforated stainless steel screen
- Captive asbestos-free non-stick gasket
- Comprehensive flow characteristics available

MATERIAL SPECIFICATION

Component	Material	Specification BS EN
Cap	Bronze	1982 CC491K
Strainer Mesh	Stainless Steel	304
Body	Bronze	1982 CC491K

PRESSURE/ TEMPERATURE RATING

PN16
16 bar -10º to 100ºC
7 bar at 170ºC
For WRAS approval -10 to 85°C

TEST PRESSURES (HYDRAULIC)

6 bar air

SPECIFICATION

Bronze body and cap with stainless steel screen
End connections threaded to BS EN 10266 (BS21 Taper ISO R7) & B1.20.1 ANSI.

DIMENSIONAL DRAWING

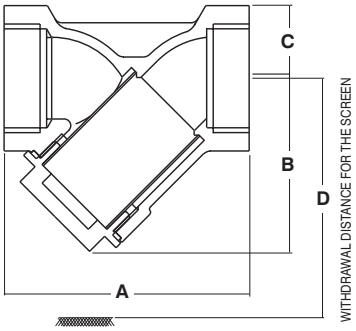

Nom Size	in	1/2	3/4	1	1 1/4	1 1/2	2
A	mm	58	70	88	96	107	126
B	mm	33	42	48	55	61	79
C	mm	15	18	20	26	31	36
D	mm	62	80	93	108	118	153
kv		4.8	8.8	16.1	25.5	36	38
Weight	kg	0.2	0.3	0.4	0.7	1.0	1.5

MESH HOLES (mm)

DN15-25: 0.75mm
DN32-50: 1.40mm

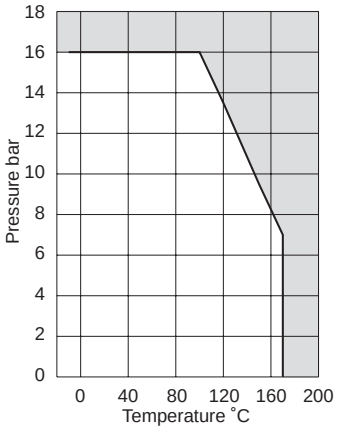

Every effort has been made to ensure that the information contained in this publication is accurate at the time of publishing. Hattersley Ltd assumes no responsibility or liability for typographical errors or omissions or for any misinterpretation of the information within the publication and reserves the right to change without notice.

301122

Hattersley®
Technical Helpline UK: 0845 604 1790 MEA: +971 4 816 5800
Email UK: tech-enquiries@hattersley.com
MEA: mena-techenquiries@hattersley.com

Fig. 827
Bronze Y-Type

WRAS APPROVED PRODUCT

STR

FEATURES & BENEFITS

- Hattersley strainers will help eliminate the problems caused by foreign matter within piping systems
- Robust and high quality bronze body
- Streamlined flow contours minimise pressure drop
- Compact design with short face to face
- Perforated stainless steel screen
- Captive asbestos-free non-stick gasket

MATERIAL SPECIFICATION

Component	Material	Specification BS EN
Cap	Bronze	1982 CC491K
Strainer Mesh	Stainless Steel	304
Body	Bronze	1982 CC491K
Cap Seal	PTFE	-
ID Plate	Aluminium	-

PRESSURE/ TEMPERATURE RATING

PN20
20 bar at -10°C to 100°C
9 bar at 180°C
For WRAS approval -10°C to 85°C

TEST PRESSURES (HYDRAULIC)

6 bar air

SPECIFICATION

Bronze Y Strainer, with body and cap to BSEN1982 CC491K, SS 304 Screen, PTFE Cap seal, PN20 rating. End connections threaded to BS EN 10266 (BS 21 Taper ISO R7) & B1.20.1 ANSI. Use suffix AT for American threads. This valve falls under SEP category and suitable for use with Group 2 gases, Group 1 Liquids and Group 2 Liquids, as defined by the Pressure Equipment Directive 2014/68/EU.*

DIMENSIONAL DRAWING

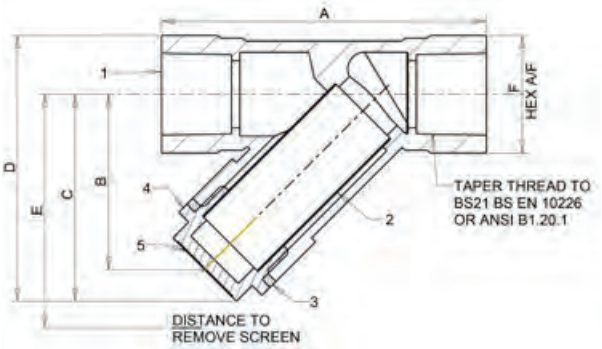

DIMENSIONS & WEIGHTS

DN		15	20	25	32	40	50
A	mm	58	70	88	96	107	126
B	mm	33	42	48	55	61	79
C	mm	40	54	60	69	76	99
D	mm	55	69	80	95	107	135
E	mm	62	80	93	108	118	153
F	mm	27	33	39	49	55	67
Mesh Hole	Ø	0.75	0.75	0.75	1.40	1.40	1.40
Weight	kg	0.19	0.30	0.43	0.74	1.01	1.46

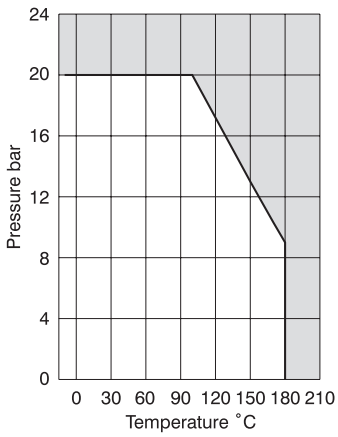

150721

Every effort has been made to ensure that the information contained in this publication is accurate at the time of publishing. Hattersley Ltd assumes no responsibility or liability for typographical errors or omissions or for any misinterpretation of the information within the publication and reserves the right to change without notice.

Fig. 822 & 922 DN50-DN300
Fig. 810 & 910 DN350-DN600
Y-Type Strainers

STR

FEATURES & BENEFITS

- Hattersley strainers will help eliminate the problems caused by foreign matter within piping systems
- Drain plug in cap as standard
- Stainless steel screen
- Test points can be fitted for system diagnostics
- 922 and 910 come fitted with two Fig 631 test points for on site pressure measurement
- ANSI versions are also available to Class 125 - Fig. 822ANSI & Fig. 922ANSI, Fig. 810ANSI & Fig. 910ANSI

MATERIAL SPECIFICATION

Part	Size	Material	Specification
Body	DN50 - DN300	Ductile Iron	BS EN 1563 EN-GJS-450-10
Body	DN350 - DN400	Cast Iron	EN-JL1040
Body	DN450 - DN600	Ductile Iron	BS EN 1563 EN-GJS-500-7
Cover	DN50 - DN300	Ductile Iron	BS EN 1563 EN-GJS-450-10
Cover	DN350 - DN400	Cast Iron	EN-JL1040
Cover	DN450 - DN600	Ductile Iron	BS EN 1563 EN-GJS-500-7
Screen	DN50 - DN600	Stainless Steel 304	
Stud	DN50 - DN600	Steel	
Nut	DN50 - DN600	Steel	
Washer	DN50 - DN600	Steel	
Drain Plug	DN50 - DN600	Malleable Iron	
Gasket	DN50 - DN300	Fibre (Asbestos Free) Klingersil C4430	
Gasket	DN350 - DN600	Graphite	
Body Plug	DN50 - DN300	Malleable Iron	
Body Plug	DN350 - DN600	Cast Iron	EN-JL1040

DIMENSIONAL DRAWING

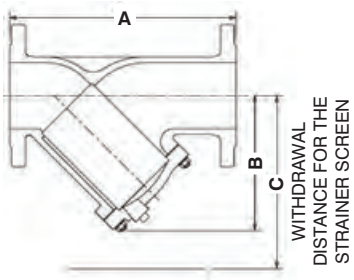

PRESSURE/ TEMPERATURE RATING

822: 16 Bar -10 to 120°C; 12.8 bar at 200°C

822ANSI: 13.8 Bar -10 to 65°C; 8.6 bar at 230°C

922 / 922ANSI: Limited to 120°C

810 / 910: 16 Bar -10 to 110°C

810 ANSI / 910 ANSI: 10.3 Bar -10 to 65°C; 8.9 Bar at 110°C

TEST PRESSURES (HYDRAULIC)

Shell: 24 bar

SPECIFICATION

Bolted cover.

Ductile or cast Iron body and cover with integrated drain plug, and a stainless steel screen.

Figure 910 & 922 supplied complete with two Figure 631 test points.

Flanges to BS EN 1092-2 PN16 or ANSI B16.1 Class 125.

All products classified in accordance with Pressure Equipment Directive 2014/68/EU, and Pressure Equipment (Safety) Regulations 2016, as amended.

Fig 822/922: Suitable for use on Group 2 Gas, Group 1 & Group 2 Liquids.

Fig 810 /910: Suitable for use on Group 2 Liquids only, and limited to 110°C.

None suitable for use on Group 1 Liquids or unstable liquids.

DIMENSIONS & WEIGHTS

Nom Size	mm	Fig. 822/922 50	65	80	100	125	150	200	250	300	Fig. 810/910 350	400	450	500	600
A	mm	230	290	310	350	400	480	600	730	850	960	1079	1168	1275	1450
B	mm	140	160	178	198	270	297	364	471	605	755	840	910	968	1160
C	mm	197	227	256	293	362	407	513	726	946	1150	1306	1434	1550	1858
Cover Plug	inch	1/2"	1"	1"	1 1/2"	2"	2"	2"	2"	2"	3/4"	1 1/2"	1 1/2"	1 1/2"	1 1/2"
Weight	kg	10	14	18	24	37	50	89	140	211	342	420	628	780	1080
Flow	kv	58	89	127	180	268	356	630	901	1247	2401	2969	*	*	*

*Please contact Hattersley for details

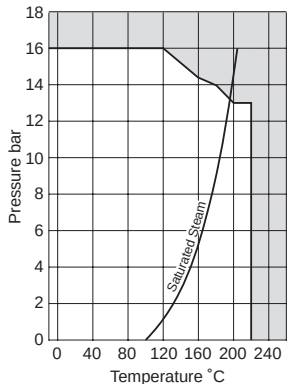

SCREEN DATA

Nom Size	mm	Fig. 822/922 50	65	80	100	125	150	200	250	300	Fig. 810/910 350	400	450	500	600
Hole Dia	mm	1.5	1.5	1.5	1.5	1.5	1.5	1.5	1.5	1.5	3	3	3	3	3
Free Flow Area/cm²	%	32	32	32	32	32	32	32	32	32	40	40	40	40	40

Every effort has been made to ensure that the information contained in this publication is accurate at the time of publishing. Hattersley Ltd assumes no responsibility or liability for typographical errors or omissions or for any misinterpretation of the information within the publication and reserves the right to change without notice.

220922

Hattersley®
Technical Helpline UK: 0845 604 1790 MEA: +971 4 816 5800
Email UK: tech-enquiries@hattersley.com
MEA: mena-techenquiries@hattersley.com

Fig. 811 & 911
Ductile Iron Y-Type

STR

FEATURES & BENEFITS

- Hattersley strainers will help eliminate the problems caused by foreign matter within piping systems
- High strength ductile iron construction
- Streamlined flow contours minimise pressure drop
- Asbestos-free non-stick gasket
- Suitable for saturated steam service
- Comprehensive flow characteristics available
- Fig. 911 comes complete with Fig. 631 test points for on site pressure monitoring

MATERIAL SPECIFICATION

Component	Material	Specification BS EN	Specification ASTM
Body	Ductile Iron	BS EN 1563	
Cover	Ductile Iron	BS EN 1563	
Screen	Stainless Steel	SS 304	AISI 304
Gasket	Teflon/Graphite	-	
Plug	Ductile Iron	BS EN 1563	

PRESSURE/ TEMPERATURE RATING

PN25
25 bar from -10 to 120ºC
21.5 bar at 220ºC
Note: 911 restricted to 120°C Max
DN300: 110°C Max

TEST PRESSURES (HYDRAULIC)

Shell: 37.5 bar

SPECIFICATION

Bolted cover.

Figure 911 supplied complete with two Figure 631 test points.

All other sizes flanged to BS EN 1092-2 PN25.

All products classified in accordance with Pressure Equipment Directive 2014/68/EU, and Pressure Equipment (Safety) Regulations 2016, as amended.

DN50-250: Suitable for use on Group 2 Gas, Group 1 & Group 2 Liquids.

DN300: Suitable for use on Group 2 Liquids only, and limited to 110°C.

None suitable for use on Group 1 Liquids or unstable liquids.

DIMENSIONAL DRAWING

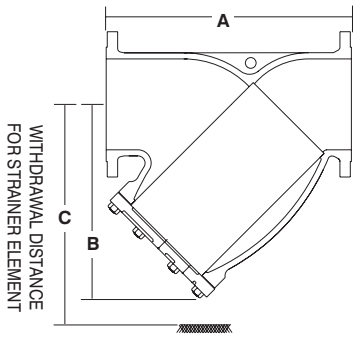

DIMENSIONS & WEIGHTS

Nom Size	mm	50	65	80	100	125	150	200	250	300
A	mm	230	273	295	352	416	470	573	660	770
B	mm	146	174	198	232	285	305	401	473	554
C	mm	178	216	248	300	373	450	621	703	834
Cover Plug	mm	1/2	1	1	1	1 1/4	1 1/2	1 1/2	2	2
Weight	kg	10.5	14.9	19.2	32.4	48	64.5	106	175	251
Flow	kv	59	93	136	229	363	499	817	1361	1928

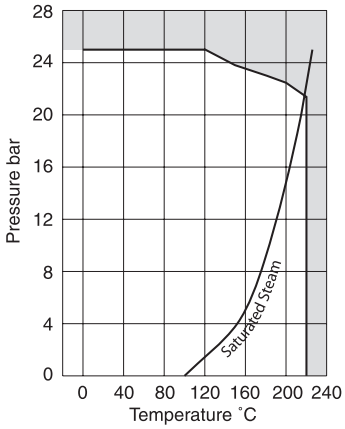

SCREEN DATA

Nom Size	mm	50	65	80	100	125	150	200	250	300
Hole Dia	mm	1.6	1.6	1.6	1.6	1.6	1.6	1.6	1.6	1.6
Free Flow Area/cm²	%	33	33	33	40	40	40	40	40	40

220922

Every effort has been made to ensure that the information contained in this publication is accurate at the time of publishing. Hattersley Ltd assumes no responsibility or liability for typographical errors or omissions or for any misinterpretation of the information within the publication and reserves the right to change without notice.

Fig.816W Strainers

WRAS APPROVED PRODUCT

FEATURES & BENEFITS

- Hattersley strainers will help eliminate the problems caused by foreign matter within piping systems
- WRAS approved range from DN65 to DN150
- WRAS approved for use with wholesome (potable) water
- DN200 is not WRAS approved
- WRAS approved internal and external epoxy powder coating

MATERIAL SPECIFICATION

Component		Material	Specification
Body		Cast Iron	BS EN 1561 EN-GJL-250
Cap		Cast Iron	BS EN 1561 EN-GJL-250
Gasket		Asbestos Free	-
Stud		Steel	BS 4439 GRADE 8.8
Nut		Steel	BS 4439 GRADE 8.8
Screen	Hole Size Ø1.5mm 32% Open Ratio	Stainless Steel 304	BS EN 10088-2: 1.4301
Drain Plug		Malleable Iron	-
Test Point Plug Rc 1/4		Malleable Iron	-

PRESSURE/ TEMPERATURE RATING

PN16
-10 to 85°C

END CONNECTION

Flanged to BS EN 1092-2 PN16

SPECIFICATION

End flanges conform to BS EN 1092-2 PN16 Section 3.2 table 11 with raised face and are normallysupplied drilled. Strainers are normally supplied with a stainless steel perforated strainer element having 1.5mm diameter holes. This product is not suitable for use on group 2 liquids only, as defined by the Pressure Equipment Directive 2014/68/EU. Bosses drilled, tapped and plugged.

SCREEN DATA

Nom size	mm	65	80	100	125	150	200
Hole Dia	mm	1.5	1.5	1.5	1.5	1.5	1.5
Free Flow Area	%	32	32	32	32	32	32
Screen Flow Area to Pipe Bore Area	%	381	287	272	268	245	227

DIMENSIONS & WEIGHTS

Size (DN)		65	80	100	125	150	200
A	mm	185	200	220	250	300	340
B	mm	20	22	24	26	28	30
C	mm	122	138	158	188	212	268
D	mm	3	3	3	3	3	3
E	mm	290	310	350	400	480	600
F	mm	210	215	245	297	333	416
G	mm	298	301	350	430	484	611
H	Rc	1 1/4”	1 1/4”	1 1/4”	1 1/2”	1 1/2”	2”
Weight	kg	23	30	43	71	93	161

DIMENSIONAL DRAWING

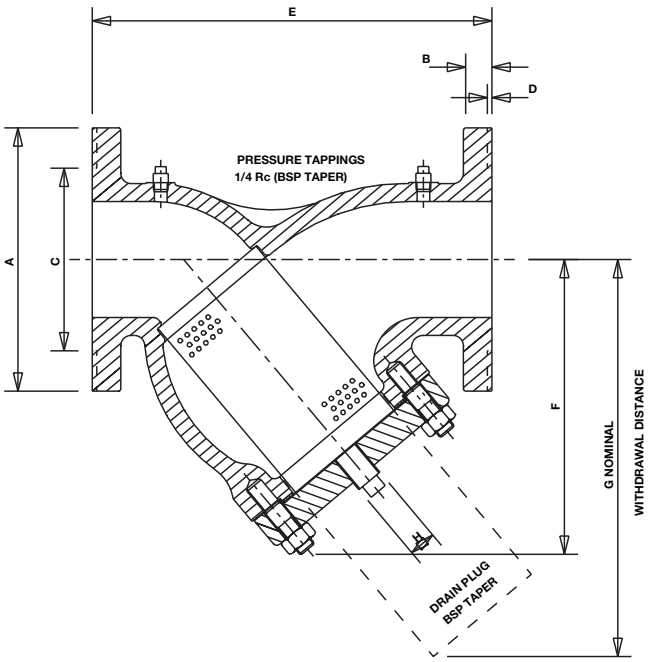

Every effort has been made to ensure that the information contained in this publication is accurate at the time of publishing. Hattersley Ltd assumes no responsibility or liability for typographical errors or omissions or for any misinterpretation of the information within the publication and reserves the right to change without notice.

120121

Hattersley
Technical Helpline UK: 0845 604 1790 MEA: +971 4 816 5800
Email UK: tech-enquiries@hattersley.com
MEA: mena-techenquiries@hattersley.com

Fig.825W Strainers

WRAS APPROVED PRODUCT

FEATURES & BENEFITS

- Hattersley strainers will help eliminate the problems caused by foreign matter within piping systems
- WRAS approved range from DN65 to DN150
- WRAS approved for use with wholesome (potable) water

MATERIAL SPECIFICATION

Component		Material	Specification	
			BS EN	ASTM
Body		Ductile Iron	1563 EN-GJS-500/7	-
Cap		Ductile Iron	1563 EN-GJS-500/7	-
Gasket		Asbestos Free	-	-
Stud		Steel	4439 GRADE 8.8	-
Nut		Steel	3692 GRADE 8	-
Screen	Hole Size Ø1.5mm 32% Open Ratio	Stainless Steel 304	10088-1:2014 1.4301*	UNS S30400 (SS304)
Drain Plug		Malleable Iron	-	-
Test Point Plug Rc 1/4		Malleable Iron	-	-

Note: BS EN material grade is the nearest equivalent to the ASTM grade.

PRESSURE/ TEMPERATURE RATING

PN25
-10 to 85°C

END CONNECTION

Flanged to BS EN 1092-2 PN25

SPECIFICATION

Flanges conform to BS EN 1092-2 PN25 Section 3.2 table 11 with raised face. Strainers are supplied with a stainless steel perforated strainer element having 1.5mm diameter holes.
This product is suitable for use on Group 2 liquids only, as defined by the Pressure equipment Directive 97/23/EC.

DIMENSIONS & WEIGHTS

Size (DN)		65	80	100	125	150
A	mm	185	200	235	270	300
B	mm	19	19	19	19	20
C	mm	118	132	156	184	211
D	mm	3	3	3	3	3
E	mm	273	295	252	412	470
F	mm	210	215	245	297	333
G	mm	298	301	350	430	484
H	(Rc)	1 1/4"	1 1/4"	1 1/4"	1 1/2"	1 1/2"
Weight	kg	25	33	43	73	97

DIMENSIONAL DRAWINGS

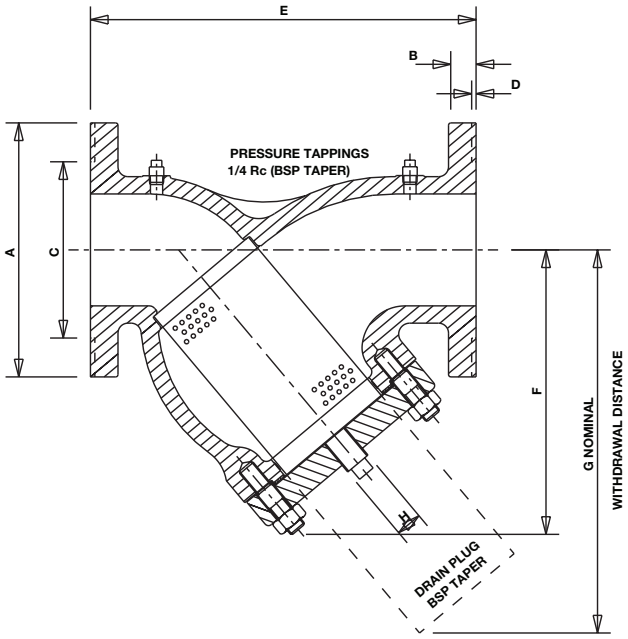

120121

Every effort has been made to ensure that the information contained in this publication is accurate at the time of publishing. Hattersley Ltd assumes no responsibility or liability for typographical errors or omissions or for any misinterpretation of the information within the publication and reserves the right to change without notice.

021219

Hattersley®

Technical Helpline UK: 0845 604 1790 MEA: +971 4 816 5800
Email UK: tech-enquiries@hattersley.com
MEA: mena-techenquiries@hattersley.com

Project: North East Energy Recovery Centre (NEERC) Billingham, Stockton-on-Tees

Sector: Public Sector

Client: SITA UK

Distributor: BSS Stockton

Contractor: John Sisk & Son and Jones Engineering

Specification: Hattersley Press-Fit Valves were specified for Europe's largest energy-from-waste site, The North East Energy Recovery Centre (NEERC) in Billingham, Stockton-on-Tees.

Its enormous incinerators generate enough power to supply 30,000 homes, and this waste-free process will also prevent an incredible 265,000 tonnes of household waste being sent to landfill every year. It also provides heat, in the form of steam, for local industry.

Press-Fit technology reduces the number of joints required to be made on site, speeding up the process and significantly reducing the risk of a leak, allowing the Jones Engineering team of 45 installers to get the job done quickly and efficiently.

More than 300 ball valves were installed in the facility's office block. Jones Engineering also installed balancing valves, strainers and check valves throughout the pipework system. Due to its sheer size, the site's system was commissioned in stages, the first being the office block in October 2012, ready for employees to move in.

Project: The Royal Marsden Hospital
Sector: Hospitals & Healthcare
Distributor: BSS
Contractor: BBESL
Specification: Hook-Ups, general isolating valves, strainers, non-return valves, DPCV, commissioning valves, WRAS approved valves.

S Shand-Brown

Hattersley™
Technical Helpline: 0845 604 1790
E: tech-enquiries@hattersley.com W: www.hattersley.com

Public Health Range

The Hattersley Public Health range consists of a number of WRAS Approved valves specifically designed for the control of hot water systems.

Thermal disinfection raises water temperatures to a level at which Legionella will not survive. This can be carried out by raising the temperature of the whole contents of the calorifier to 70°C then circulating the water throughout the system for at least an hour. To be effective, the temperature at the calorifier should be high enough to ensure that the temperature at the taps and appliances does not fall below 60°C.

The range consists of valves which offer self-balancing, thermostatically controlled regulation of flow and thermal disinfection assisting with protection against Legionella. These systems are complemented by Thermostatic Mixing Valves which blend hot water (stored at temperatures high enough to kill bacteria) with cold, to ensure constant and safe outlet temperatures to prevent scalding.

These systems are ideal for a range of projects including healthcare, schools, workplace and domestic environments.

Fig. 2900

Fig.816W Strainers

WRAS APPROVED PRODUCT

FEATURES & BENEFITS

- Hattersley strainers will help eliminate the problems caused by foreign matter within piping systems
- WRAS approved range from DN65 to DN150
- WRAS approved for use with wholesome (potable) water
- WRAS approved internal and external epoxy powder coating

MATERIAL SPECIFICATION

Component		Material	Specification	
			BS EN	ASTM
Body		Cast Iron	1561 EN-GJL-250	-
Cap		Cast Iron	1561 EN-GJL-250	-
Gasket		Asbestos Free	-	-
Stud		Steel	4439 GRADE 8.8	-
Nut		Steel	4439 GRADE 8	-
Screen	Hole Size Ø1.5mm 32% Open Ratio	Stainless Steel 304	10088-1:2014 1.4301*	UNS S30400 (SS304)
Drain Plug		Malleable Iron	-	-
Test Point Plug Rc 1/4		Malleable Iron	-	-

* Note: BS EN material grade is the nearest equivalent to the ASTM grade.

PRESSURE/ TEMPERATURE RATING

PN16
-10 to 85°C

END CONNECTION

Flanged to BS EN 1092-2 PN16

SPECIFICATION

End flanges conform to BS EN 1092-2 PN16 Section 3.2 table 11 with raised face and are normallysupplied drilled. Strainers are normally supplied with a stainless steel perforated strainer element having 1.5mm diameter holes. This product is not suitable for use on group 2 liquids only, as defined by the Pressure Equipment Directive 2014/68/EU. Bosses drilled, tapped and plugged.

DIMENSIONAL DRAWING

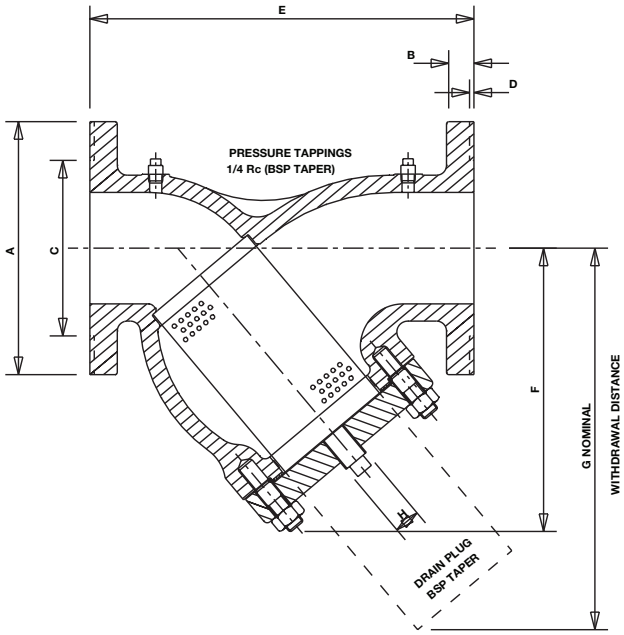

DIMENSIONS & WEIGHTS

Size (DN)		65	80	100	125	150
A	mm	185	200	220	250	300
B	mm	20	22	24	26	28
C	mm	122	138	158	188	212
D	mm	3	3	3	3	3
E	mm	290	310	350	400	480
F	mm	210	215	245	297	333
G	mm	298	301	350	430	484
H	Rc	1 1/4”	1 1/4”	1 1/4”	1 1/2”	1 1/2”
Weight	kg	16	21	32	46	62

Every effort has been made to ensure that the information contained in this publication is accurate at the time of publishing.
Hattersley Ltd assumes no responsibility or liability for typographical errors or omissions or for any misinterpretation of the information within the publication and reserves the right to change without notice.

091018

Hattersley®
Technical Helpline UK: 0845 604 1790 MEA: +971 4 816 5800
Email UK: tech-enquiries@hattersley.com
MEA: mena-techenquiries@hattersley.com

Fig.825W Strainers

WRAS APPROVED PRODUCT

FEATURES & BENEFITS

- Hattersley strainers will help eliminate the problems caused by foreign matter within piping systems
- WRAS approved range from DN65 to DN150
- WRAS approved for use with wholesome (potable) water

MATERIAL SPECIFICATION

Component		Material	Specification	
			BS EN	ASTM
Body		Ductile Iron	1563 EN-GJS-500/7	-
Cap		Ductile Iron	1563 EN-GJS-500/7	-
Gasket		Asbestos Free	-	-
Stud		Steel	4439 GRADE 8.8	-
Nut		Steel	3692 GRADE 8	-
Screen	Hole Size Ø1.5mm 32% Open Ratio	Stainless Steel 304	10088-1:2014 1.4301*	UNS S30400 (SS304)
Drain Plug		Malleable Iron	-	-
Test Point Plug Rc 1/4		Malleable Iron	-	-

Note: BS EN material grade is the nearest equivalent to the ASTM grade.

PRESSURE/ TEMPERATURE RATING

PN25
-10 to 85°C

END CONNECTION

Flanged to BS EN 1092-2 PN25

SPECIFICATION

Flanges conform to BS EN 1092-2 PN25 Section 3.2 table 11 with raised face.
Strainers are supplied with a stainless steel perforated strainer element having 1.5mm diameter holes.
This product is suitable for use on Group 2 liquids only, as defined by the Pressure equipment Directive 97/23/EC.

DIMENSIONAL DRAWINGS

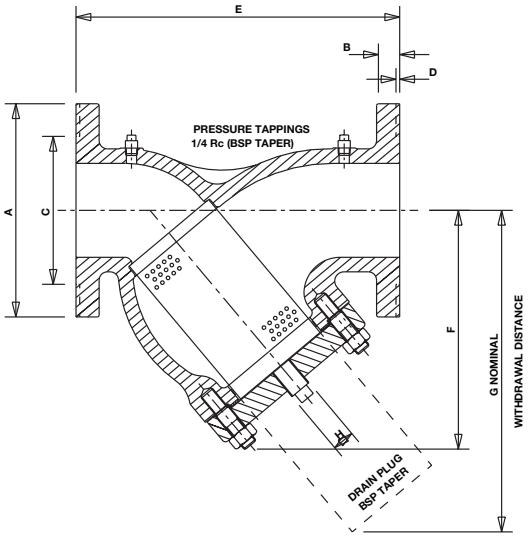

DIMENSIONS & WEIGHTS

Size (DN)		65	80	100	125	150
A	mm	185	200	235	270	300
B	mm	19	19	19	19	20
C	mm	118	132	156	184	211
D	mm	3	3	3	3	3
E	mm	273	295	252	412	470
F	mm	210	215	245	297	333
G	mm	298	301	350	430	484
H	(Rc)	1 1/4"	1 1/4"	1 1/4"	1 1/2"	1 1/2"
Weight	kg	25	33	43	73	97

Note: These valves are not intended to be used as backflow prevention devices conforming to Schedule 2 Section 6 of the WRAS Water Regulations Guide.

Every effort has been made to ensure that the information contained in this publication is accurate at the time of publishing.
Hattersley Ltd assumes no responsibility or liability for typographical errors or omissions or for any misinterpretation of the information within the publication and reserves the right to change without notice.

091018

Fig.973W
Lever Operated Double Regulating Valve

WRAS APPROVED PRODUCT

FEATURES & BENEFITS

- WRAS approved Double Regulating Valves consist of a fully lugged, WRAS approved EPDM liner butterfly valve with a Double Regulating Lever
- The Double Regulating feature allows the valve to be used for isolation and to be reopened to its pre-set position to maintain required flow rate
- Use the Fig.973W with Orifice plate Fig.M2000 for Commisioning Set

MATERIAL SPECIFICATION

Componant	Material	Specification	
		BS EN	ASTM
Body	Ductile Iron	1563 EN-JS 1030	A536 65-45-12
Disc	Aluminium Bronze	1982:2008 CC331G	B148 C95400
Seat	EPDM WRAS approved	WRAS approved	-
Shaft	Stainless Steel	10088-1:2014 1.4006	UNS41000 (SS410)
Taper Pin	Steel	-	A276 Type 316
Key	Carbon Steel	-	-
O-Ring	Nitrile (Buna)	-	-
Shaft Bushing	PTFE or Bronze	-	-

Note: BS EN material grade is the nearest equivalent to the ASTM grade.

PRESSURE/ TEMPERATURE RATING

16 bar
-10 to 80°C

END CONNECTION

Flanged to BS EN 1092-2 PN16

DIMENSIONS & WEIGHTS

Size (DN)		65	80	100	125	150
A	mm	207	213	232	245	256
B	mm	95	102	124	137	150
C	mm	260	260	260	260	266
D	mm	48	48	48	57	57
Weight	kg	5	8	13	14	15

COEFFICIENTS*

Size (DN)		65	80	100	125	150
Flow	(Kv)	170	261	519	884	1142
Headloss	(K)	0.856	0.856	0.650	0.553	0.483

DIMENSIONAL DRAWINGS

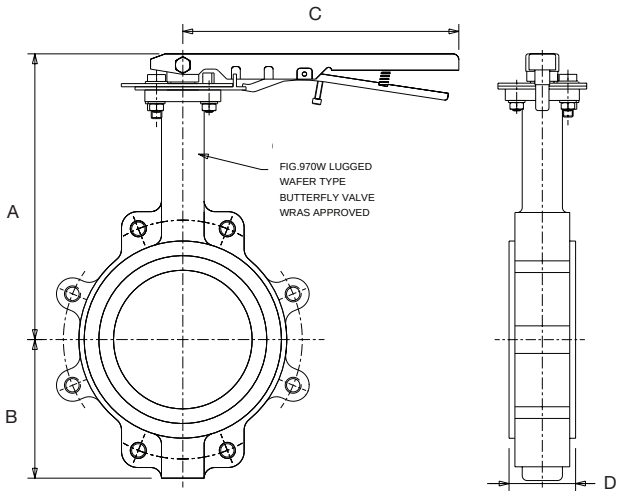

190422

Hattersley
Technical Helpline UK: 0845 604 1790 MEA: +971 4 816 5800
Email UK: tech-enquiries@hattersley.com
MEA: mena-techenquiries@hattersley.com

Fig. 3047W
Bronze - Swing Pattern

WRAS APPROVED PRODUCT

NRV

FEATURES & BENEFITS

- Horizontal swing pattern
- Robust and high quality bronze body
- Various disc materials available
- Taper threaded to BS EN 10226 ISO 7-1 (BS 21)
- WRAS Approved to 85°C

MATERIAL SPECIFICATION

Component	Material	Specification BS EN
Body	Bronze	1982 CC491K
Cap	Bronze	1982 CC491K
Disc Holder (1/2" to 1")	Brass	12164 CW614N
Disc Holder (1 1/4" to 2")	Bronze	1982 CC491K
Disc	Nitrile	2751 BA80
Disc Retaining Nut	Brass	12164 CW614N
Disc Retaining Washer	Brass	12164 CW614N
Hinge	Bronze	1982 CC491K
Hinge Pin	Stainless Steel	970 GR316S11
Hinge Nut	Brass	12164 CW614N
Identification Plate	Aluminium	-
Drive Screw	Steel Electro Brassed	-

DIMENSIONAL DRAWING

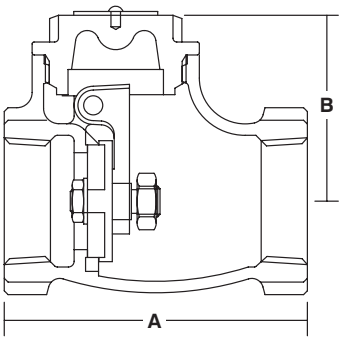

DIMENSIONS & WEIGHTS

Nom Size	in	3/4	1	1 1/4	1 1/2	2
A	mm	66	80	89	95	108
B	mm	42	49	56	65	76
Weight	kg	0.43	0.63	1.01	1.34	2.12

PRESSURE/ TEMPERATURE RATING

BS 5154:1991 PN25
25 bar from -10 to restricted 90ºC

TEST PRESSURES

Shell: 6 bar - pneumatic
Seat: 27.5 bar - hydraulic

SPECIFICATION

Horizontal swing pattern.
Threaded cover.
Alternative disc materials available.
Ends threaded internal BS EN 10226.
Suitable for mounting in horizontal and vertical pipe (with vertical flow upwards).

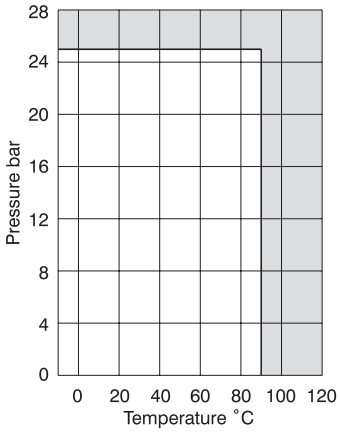

Every effort has been made to ensure that the information contained in this publication is accurate at the time of publishing. Hattersley Ltd assumes no responsibility or liability for typographical errors or omissions or for any misinterpretation of the information within the publication and reserves the right to change without notice.

Technical Helpline UK: 0845 604 1790 MEA: +971 4 816 5800
Email UK: tech-enquiries@hattersley.com
MEA: mena-techenquiries@hattersley.com

Fig. 416
Pressure Reducing Valve

WRAS APPROVED PRODUCT

FEATURES & BENEFITS

- PRVs enable control of pressure from boosted cold water supplies to match site requirements
- Simple to install
- Features an integral strainer preventing debris from affecting valve performance
- Recommend that isolation valves are fitted upstream and downstream of the valve to enable isolation for cleaning of strainer
- Manufactured generally in accordance with BS EN 1567
- Easy access for measuring the outlet pressure
- Includes male union tail-pieces, plugs for bosses and gaskets for temperature gauge
- Pressure gauge is required for each installed valve and should be ordered separately
- WRAS Approved

MATERIAL SPECIFICATION

Component	Material	Specification
Body	Bronze	CC499K
Internal Parts	Bronze	CC499K
	Brass	CW614N
	Stainless Steel	SS316
Spring	Spring Steel	-
Strainer	Stainless Steel	SS304

PRESSURE RATING
PN16

MAXIMUM TEMPERATURE
80°C

PRESSURE GAUGE
Pressure gauge used to measure outlet pressure; available with axial or vertical G 1/4" threaded connection

SPECIFICATION

Medium:	Water Only
Connections:	Male tapered BS EN 10226-2
Outlet pressure range:	1-8 bar
Pre set outlet pressure:	3 bar
Design standard:	BS EN 1567
Approvals:	WRAS / DVGW / PED 2014/68/EU
Mesh size:	1/2" - 1 1/4" - 0.60mm 1 1/2" - 2" - 0.75mm

DIMENSIONAL DRAWING

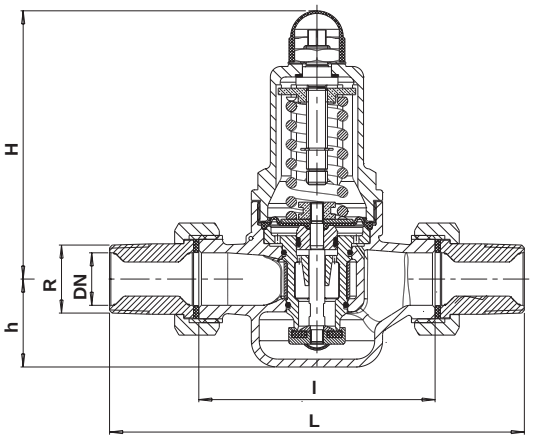

DIMENSIONS & WEIGHTS

Nom Size	in	1/2	3/4	1	11/4	11/2	2
L	mm	142	158	180	193	226	252
l	mm	80	90	100	105	130	140
H	mm	102	102	130	130	165	165
h	mm	33	33	45	45	70	70
R	in	1/2"	3/4"	1"	1 1/4"	1 1/2"	2"
Weight	kg	1.2	1.3	2.4	2.6	5.5	6

MAX FLOW

Size	1/2"	3/4"	1"	1 1/4"	1 1/2"	2"
Max. Capacity (l/sec)	1.96	2.52	4.48	5.04	8.4	9.8

Every effort has been made to ensure that the information contained in this publication is accurate at the time of publishing.
Hattersley Ltd assumes no responsibility or liability for typographical errors or omissions or for any misinterpretation of the information within the publication and reserves the right to change without notice.

140218

Hattersley®
Technical Helpline UK: 0845 604 1790 MEA: +971 4 816 5800
Email UK: tech-enquiries@hattersley.com
MEA: mena-techenquiries@hattersley.com

Fig. 425
Pressure Reducing Valve

WRAS APPROVED PRODUCT

FEATURES & BENEFITS

- PRVs enable control of pressure from boosted hot and cold water supplies to match site requirements
- Includes male union tail-pieces for ease of installation, reducing time spent on site
- Features an integral strainer preventing debris from affecting valve performance
- Recommend that isolation valves are fitted upstream and downstream of the valve to enable isolation for cleaning of strainer
- Performance in accordance with BS EN 1567 for quality assurance
- Easy access for measuring the outlet pressure
- A pressure gauge is available to measure outlet pressure for each installed valve and should be ordered separately
- WRAS Approved to 80°C for drinking water applications

MATERIAL SPECIFICATION

Component	Material	Specification
Body	DZR Brass	EN 12165: CW625N
Plug (Bottom Cap)	DZR Brass	EN 12165: CW625N
Bonnet (Upper Cap)	Polyamide	PA6 GF30
Cartridge	Acetal	POM
Filter Screen	Stainless Steel	Aisi 304
Spring	Spring Steel	En 10270-1
Nuts	Brass	EN12165: CW617N
Dismantling Fittings	DZR Brass	EN 12164: CW626N
Other Internal Parts (in contact with water)	DZR Brass	EN 12164: CW626N
Other Components (not in contact with water)	Brass	EN 12164: CW614N
Diaphragm	EPDM	-
Seat Gaskets	EPDM	-
O-Rings	EPDM	-
Gaskets	Pressed Fibre	(Asbestos Free)

PRESSURE GAUGE

Pressure gauge used to measure outlet pressure; available as 1/4" male threaded back connection

PRESSURE RATING

PN25

MAXIMUM TEMPERATURE

80°C

SPECIFICATION

Medium:	Water Only
Connections:	Male union tapered tail-pieces to BS EN 10226-1
Outlet pressure range:	1-6 bar
Pre set outlet pressure:	3 bar
Design standard:	BS EN 1567
Approvals:	WRAS / PED 2014/68/EU
Mesh size:	0.5mm all sizes

DIMENSIONAL DRAWING

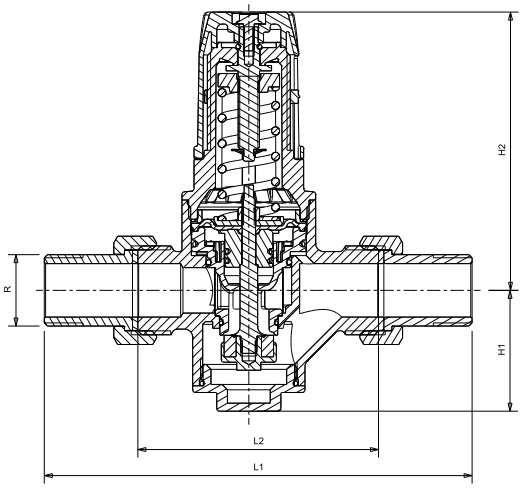

DIMENSIONS & WEIGHTS

Nom Size	in	1/2	3/4	1	11/4	11/2	2
L1	mm	140	160	180	200	225	255
L2	mm	80	90	100	105	130	140
H1	mm	45	45	49.5	58.5	72.5	82
H2	mm	104	104	131	130	166.5	163.5
Thread R	in	1/2"	3/4"	1"	1 1/4"	1 1/2"	2"
Weight	kg	0.8	0.9	1.5	1.7	3.5	4.2

MAX FLOW

Size	1/2"	3/4"	1"	1 1/4"	1 1/2"	2"
Max. Capacity (l/sec)	0.35	0.63	1.00	1.60	2.53	3.89

Every effort has been made to ensure that the information contained in this publication is accurate at the time of publishing. Hattersley Ltd assumes no responsibility or liability for typographical errors or omissions or for any misinterpretation of the information within the publication and reserves the right to change without notice.

260918

Fig. 425 Pressure Reducing Valve Direct Acting - Diaphragm style

FORM AND FUNCTION

Diaphragm Actuated Pressure Reducing Valve (PRV)

PRVs enable control of outlet pressure from boosted water supplies to meet site requirements, as a result, protecting the downstream system and stabilising water pressure. Particularly suitable where low loss and hysteresis are required along with a high level of control accuracy.

FEATURES & BENEFITS

- DZR brass for long lasting corrosion resistant performance
- Integrated pressure scale making on-site pressure setting simple and fast
- Includes male union tail-pieces reducing installation time
- Integral stainless steel strainer prevents debris from affecting valve performance
- Performance in accordance with BS EN 1567 for quality assurance
- 1/4" outlet pressure gauge connection both sides for flexibility and accurate setting
- WRAS Approved to 80°C for drinking water applications

PRESSURE GAUGE

Pressure gauge used to measure outlet pressure; available as 1/4" male threaded back connection

MATERIAL SPECIFICATION

Component	Material	Specification
Body	DZR Brass	EN 12165: CW625N
Plug (Bottom Cap)	DZR Brass	EN 12165: CW625N
Bonnet (Upper Cap)	Polyamide	PA6 GF30
Cartridge	Acetal	POM
Filter Screen	Stainless Steel	Aisi 304
Spring	Spring Steel	En 10270-1
Nuts	Brass	EN12165: CW617N
Dismantling Fittings	DZR Brass	EN 12164: CW626N
Other Internal Parts (in contact with water)	DZR Brass	EN 12164: CW626N
Other Components (not in contact with water)	Brass	EN 12164: CW614N
Diaphragm	EPDM	-
Seat Gaskets	EPDM	-
O-Rings	EPDM	-
Gaskets	Pressed Fibre	(Asbestos Free)

SPECIFICATION

Pressure Rating:	PN25
Medium:	Water Only
Connections:	Male union tapered tail-pieces to BS EN 10226-1
Outlet pressure range:	1-6 bar
Pre set outlet pressure:	3 bar
Max temperature:	80°c
Design standard:	BS EN 1567
Approvals:	WRAS Approved on cold water only • PED 2014/68/EU

The Pressure Reducing Valve (PRV) shall be diaphragm actuated and WRAS approved. Outlet pressure should be externally adjustable from 1 to 6 bar, with capacity to accommodate a pressure gauge for easy reading. The body and cap shall be manufactured from DZR brass, with a Polyamide cap with integrated pressure scale, Acetal cartridge and EPDM seat gaskets, O-rings and diaphragm. The PRV shall have an integral strainer with stainless steel basket. All Dismantling fittings shall be DZR brass.

The PRV shall be PN25 Rated, and suitable for temperatures up to 80°c as per Hattersley Fig. 425

DIMENSIONAL DRAWING

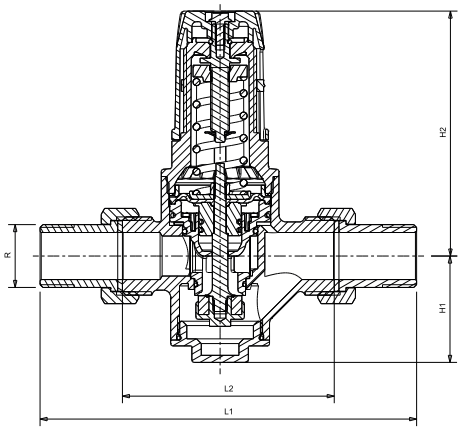

DIMENSIONS & WEIGHTS

Nom Size	in	1/2	3/4	1	11/4	11/2	2
L1	mm	140	160	180	200	225	252
L2	mm	80	90	100	105	130	140
H1	mm	45	45	49.5	58.5	72.5	82
H2	mm	104	104	131	130	166.5	163.5
Thread R	in	1/2"	3/4"	1"	11/4"	11/2"	2"
Kv	m3/h	1.8	2.1	3.20	3.40	6.4	6.50
Weight	kg	0.8	0.9	1.5	1.7	3.5	4.2
Max Capacity (l/s)		0.35	0.63	1.00	1.60	2.53	3.89

* Kv Values calculated with the valve in fully open position.

Every effort has been made to ensure that the information contained in this publication is accurate at the time of publishing.
Hattersley Ltd assumes no responsibility or liability for typographical errors or omissions or for any misinterpretation of the information within the publication and reserves the right to change without notice.

070920

Technical Helpline UK: 0845 604 1790 MEA: +971 4 816 5800
Email UK: tech-enquiries@hattersley.com
MEA: mena-techenquiries@hattersley.com

Fig. M416 & Fig. M425

Pressure Reducing Valves*

FEATURES & BENEFITS

- PRV's enable control of pressure from boosted cold water supplies to match site requirements
- Has a pilot valve assembly to enable accurate pressure control
- Easy setting of the outlet pressure using built-in pressure gauge
- Simple to install
- Sizes DN100 & DN150

Fig.M416

MATERIALS

Item	Component	Material
1	Body	Ductile iron
2	Plug	Brass
3	Plug	Brass
4	Body Seat	Stainless steel
5	Seat locking bolt	304 stainless steel
6	Seat locking bolt long	304 stainless steel
7	Nameplate	Aluminium
8≠	Bolt locking plate	Stainless steel
9	Disc	Ductile iron
10	Disk facing	Rubber
11	Disc Guide	Bronze + St Steel
12	Spring Washer	316 stainless steel
13	Bolt	316 stainless steel
14	Stem	303 stainless steel
15	'O' Ring	Rubber
16	Washer	316 stainless steel
17	Spring washer	316 stainless steel
18≈	Nut	316 stainless steel
18a≠	Bolt	316 stainless steel
19	Diaphragm disc	Ductile Iron
20	'O' Ring	Ductile Iron
21	Diaphragm	Rubber
22	Washer	316 stainless steel
23	Spring Washer	316 stainless steel
24	Nut	316 stainless steel
25	Cover	Ductile Iron
26*	Washer	Stainless steel
27*	Bolt	Stainless steel
28*	Nut	Stainless steel
29	Lifting Nut	Steel
30	Spring	302 stainless steel
31	Guide cover	Brass/Bronze
32	'O' Ring	Rubber
33	'O' Ring	Rubber
34	Adaptor	Brass
35	Air release nut	Brass
36	Guide cover bolts	Steel

COMPONENTS - BASIC VALVE

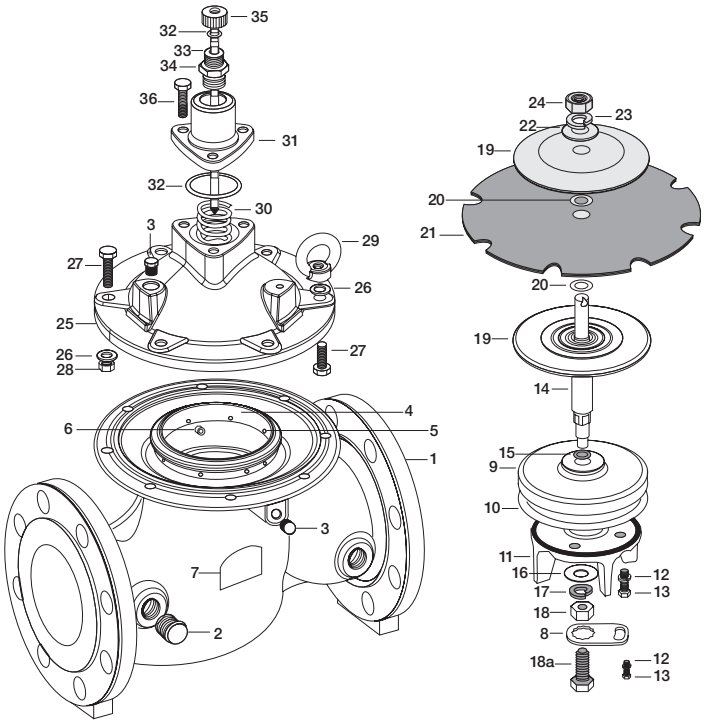

* PN25 flanged can only be used to a maximum operating inlet pressure of 18 bar. Refer to Cavitation Chart, inlet and outlet pressure, in IOM.

≠ DN150 sizes

≈ DN100 sizes

* 100 & DN150

200623

Fig. M416 & Fig. M425

Pressure Reducing Valves*

DIMENSIONAL DRAWING

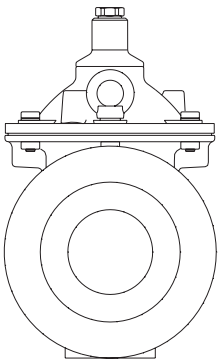

Front view

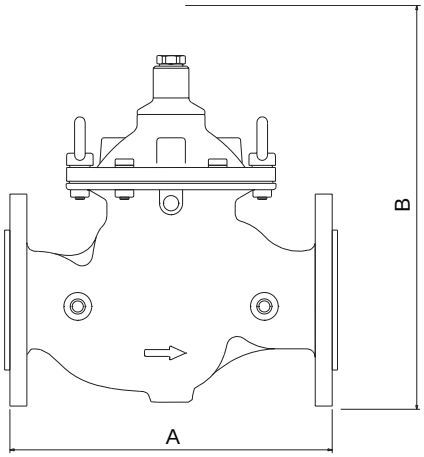

Side view

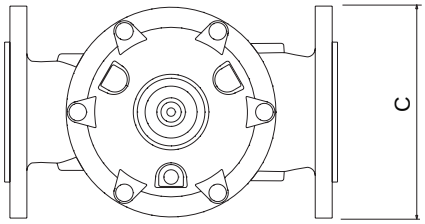

Top view

PRESSURE RATING

PN16 (Fig. M416)
& PN25 (Fig. M425)

TEMPERATURE

Max. 85˚C

SPECIFICATION

Medium:	Potable Water
Connections:	Flanged to BS EN 1092-2
Outlet pressure range:	0.5 - 6 bar
Design standard:	BS EN 558 Series 1
Approvals:	WRAS

DIMENSIONS & WEIGHTS

Nom (DN)		100	150
A	mm	350	480
B	mm	390	500
C	mm	43	88
Weight	kg	43	48

NOTE: Minimum space required for maintenance and to allow for the pilot valve, pipework and fittings, which can exceed the width ‘A’ and height ‘B’ of the valve.

The dimensions above are for the complete valve assembly including basic valve, pressure gauge and pilot valve.

HYDAULIC CHARACTERISTICS OF PRV

Characteristics	Units	DN100	DN150
Max. recommended flowrate for continuous operation Flow velocity = 5.5m/s	m3/h	160	350
Min. recommended flowrate	m3/h	1	1
Kv	m3/h	167	407
Control chamber volume	l	0.7	1.5

200623

Technical Helpline UK: 0845 604 1790 MEA: +971 4 816 5800
Email UK: tech-enquiries@hattersley.com
MEA: mena-techenquiries@hattersley.com

Project: Wheelock Square Tower, Shanghai

Sector: Commercial

Client: The Wharf (Holdings) Ltd

Architect: Kohn Pedersen Fox Associates

Consulting Engineer: Parsons Brinckerhoff (Asia) Ltd

Contractor: Shanghai M&E Installation Co Ltd (the 5th company), China Construction (Shanghai)

Distributor: Goodways International (Hong Kong) Limited

Specification: Hattersley Globe Valves, Butterfly Valves, Gate Valves and Swing Check Valves.

As the tallest building in the Jing'an commercial district of Shanghai, the 298 metre tall Shanghai Wheelock Square Tower on the famous Nanjing Road has 56 floors above ground and 2 below.

The tower provides 110,000 square metres of office, hotel and retail space.

Selected for their durable quality, Hattersley's Bronze Globe Valves and PN25 Butterfly Valves have been installed in the HVAC system and their Cast Iron Gate and Swing Check Valves have been installed in the plumbing and drainage system.

041219

LEGIONELLA
ARE YOU AT RISK ?

Hattersley™

The Facts…

In Europe it is believed 6,000 cases of Legionnaires' disease are diagnosed every year, while in 2010 more than 350 cases were identified in the UK with approximately 10% of these resulting in fatalities.*

Thermal Circulation Valves

High Risk

Areas of high risk due to the generation of aerosol droplets of water suspended in air include cooling towers, domestic hot water services (DHWS), showers, taps and whirlpool spa baths.

Legionella is also found in untreated surface waters, is not always removed by conventional water treatment processes and can easily colonise environments such as hot and cold water distribution systems. In these systems Legionella is able to flourish at temperatures between 20°C and 45°C, especially where dirt, scale or biofilms are present.

The bacteria can survive under a wide variety of environmental conditions. The organisms are dormant below 20°C and will not survive above 60°C, but grow most prolifically at about 37°C.

Legal Considerations

Legal requirement for designers and installers of DHWS to consider the risks of Legionella are to be found in the Health & Safety at Work Act (HSWA) 1974 and Control of Substances Hazardous to Health Regulations (COSHH) 1999. In addition, L8- HSE ACOP (Approved Code of Practice and Guidance) gives practical advice on the requirements of HSWA & COSHH. L8 has a 'special' legal status and following L8 guidelines demonstrates compliance with the law.

*Health Protection Report Vol. 6 No. 9, March 2012

So How Does Thermal Disinfection Work

The key is to keep water hot. Thermal disinfection raises water temperature to a level at which Legionella will not survive. This can be carried out by raising the temperature of the whole contents of the calorifier to 70°C then circulating this water throughout the system for at least an hour.

To be effective, the temperature at the calorifier should be high enough to ensure that the temperature at the taps and appliances does not fall below 60°C.

The Core Range

Hattersley TCVs are available in DN15 low flow and DN15 & DN20 standard flow sizes.

Key Features & Benefits

- Ideal for DHWS to help protect against Legionella.
- Provides self-balancing, thermostatically controlled regulation of flow and disinfection.
- Thermal disinfection at temperatures above 70°C.
- Thermal balancing reduces commissioning time and hence cost.
- Schedule and selection service available.
- Compact unit comprising isolation valve with thermometer access point.
- Incorporates a settable temperature sensing cartridge, factory pre-set at a standard 57°C.
- Easily verifiable temperatures by thermometer (available as an accessory).
- Valve opens automatically during disinfection.
- Has an accuracy of +/- 2°C.
- WRAS Approved.

WRAS APPROVED PRODUCT

WRAS.290515

Thermal Circulation Valve

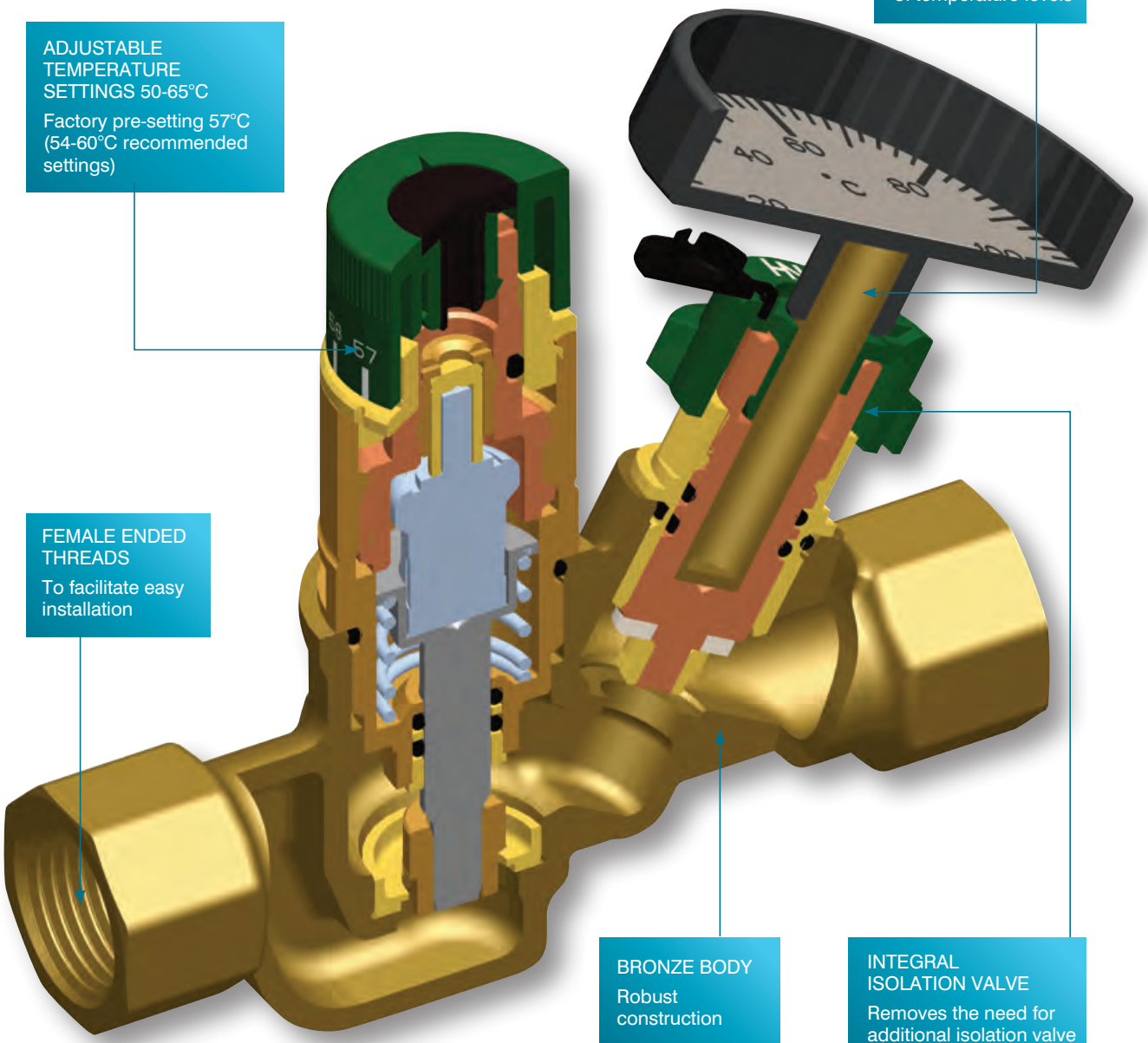

Every effort has been made to ensure that the information contained in this publication is accurate at the time of publishing.
Hattersley Ltd assumes no responsibility or liability for typographical errors or omissions or for any misinterpretation of the information within the publication and reserves the right to change without notice.

0813

Technical Helpline UK: 0845 604 1790 MEA: +971 4 816 5800
Email UK: tech-enquiries@hattersley.com
MEA: mena-techenquiries@hattersley.com

Fig. 2900 & 2910
Thermal Circulation Valves

WRAS APPROVED PRODUCT

FEATURES & BENEFITS

- Ideal for domestic hot water systems to assist with protection against Legionella
- Provides self-balancing, thermostatically controlled regulation of flow and disinfection
- Thermal disinfection at temperatures above 70°C
- Compact unit comprising isolation valve with thermometer access point
- Incorporates a settable temperature sensing cartridge, factory pre-set at a standard 57°C
- Has an accuracy of +/- 2°C at set temperature
- WRAS Approved

MATERIAL SPECIFICATION

No.	Component	Material	Specification
1	Body	Bronze	BS EN 1982 CC49IK
2	Protective Cap (Removable)	Polypropylene	-
3	Temperature Adjusting Cap - TU	Nylon 6	-
4	Bonnet and Associated Parts - TU	DZR Brass	BS EN 12164 CW602N
5	Handwheel - Isolation Unit (IU)	Nylon 6	-
6	Bonnet - IU	DZR Brass	BS EN 12164 CW602N
INT	Stem - Thermal Unit (TU)	Stainless Steel	SS EN10088-3 1.4305
INT	Body Seat - TU	DZR Brass	BS EN 12164 CW602N
INT	Plug - TU	DZR Brass	BS EN 12164 CW602N
INT	Bush - TU	DZR Brass	BS EN 12164 CW602N
INT	O-Ring Seals - TU	EPDM Rubber	WRAS Approved
INT	Stem - IU	DZR Brass	BS EN 12164 CW602N
INT	Body Seat - IU	PTFE	WRAS Approved
INT	Stem Seat Retainer - IU	DZR Brass	BS EN 12164 CW602N
INT	O-Ring Seals - IU	EPDM Rubber	WRAS Approved

TU - Thermal Unit
IU - Isolation Unit

DIMENSIONAL DRAWINGS

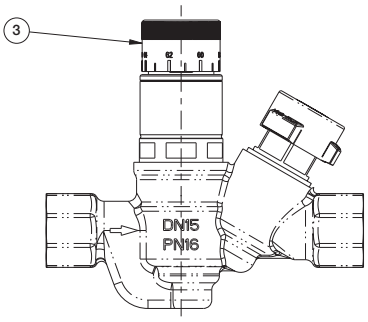

VIEW WITH PROTECTION CAP (ITEM 2) REMOVED

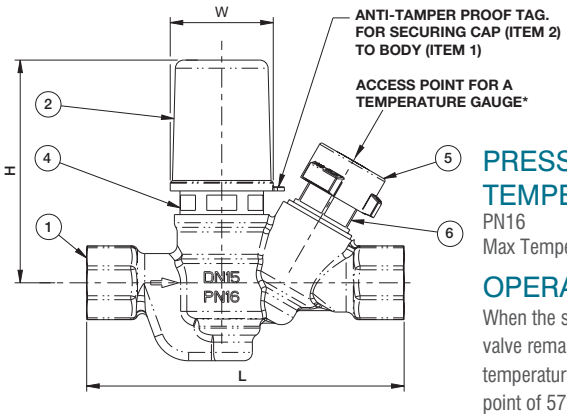

PRESSURE/ TEMPERATURE RATING

PN16
Max Temperature 90°C

OPERATION

When the set point is preset to 57°C, the valve remains completely open up to a valve temperature of 52°C. Between 52°C and the set point of 57°C, the valve starts to close. When the set point temperature has been reached, a minimum volume flow is continously flowing through the circulation system. If the storage temperature is further increased to temperatures greater than 70°C to effect disinfection, the valve increases the flow.

SPECIFICATION

Taper threaded to BS EN 10226-2

DIMENSIONS & WEIGHTS

Nom Size	Fig. No	Flow	L (mm)	H (mm)	W (mm)	Female End Connections	Weight (Kg)
DN15*	2910	Low Flow	114	80	Ø37	Pipe Thread EN 10226 Rc 1/2"	0.76
DN15*	2900	Standard	114	80	Ø37	Pipe Thread EN 10226 Rc 1/2"	0.76
DN20*	2900	Standard	126	80	Ø37	Pipe Thread EN 10226 Rc 3/4"	0.88

*Thermometer fits all sizes. Available on request

Every effort has been made to ensure that the information contained in this publication is accurate at the time of publishing.
Hattersley Ltd assumes no responsibility or liability for typographical errors or omissions or for any misinterpretation of the information within the publication and reserves the right to change without notice.

011222

Fig. 2900 & 2910 Thermal Circulation Valves

The charts on this page show performance characteristics of each valve size at various temperatures.

PERFORMANCE & FLOW CHARTS

- At initial installation and start up, and with system temperature below the valve set point of 57°C, the valves are fully open allowing a higher flow rate through the valves
- As the system temperature increases, the valve will partially close until it reaches the set point of 57°C. At this temperature the valve will remain static and slightly open to allow a continuous flow of fluid. This is critical to avoid dead-legs with stagnant water in the system
- Thermal disinfection is best achieved at higher temperatures and fully effective at 70°C. Our valves have been designed such that the flow through the valves increases during the disinfection process
- Graphs show the relationship between flow rate (l/s) and differential pressure (kPa) for the 3 operating positions of the TCV. As the TCV responds to a change in water temperature the flow coefficient (Kv) changes. The differential pressure created by an individual flow rate can be read off the graph using the relevant temperature line

DN15 LOW FLOW

Set Position 57°C

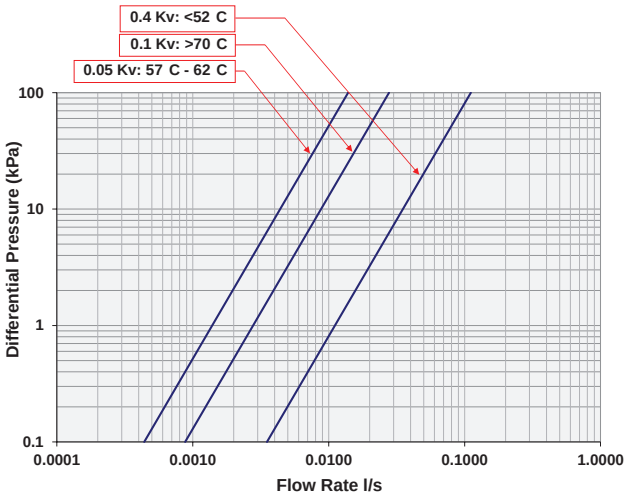

DN15 STANDARD FLOW

Set Position 57°C

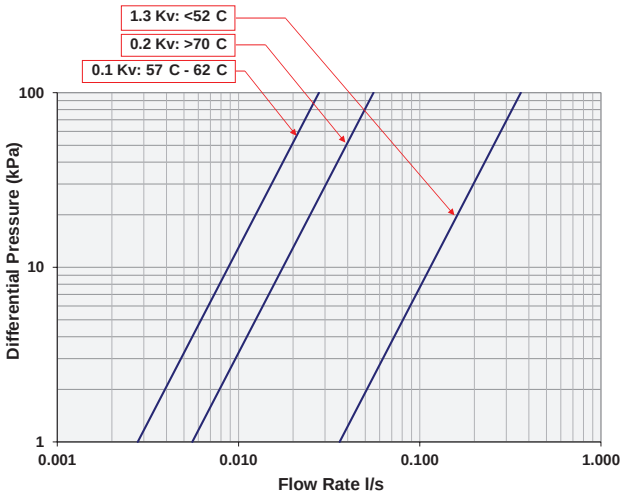

DN20 STANDARD FLOW

Set Position 57°C

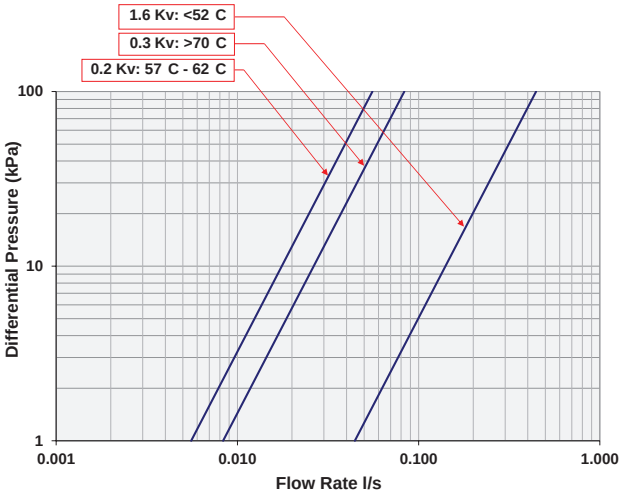

THERMAL REGULATION RESPONSE*

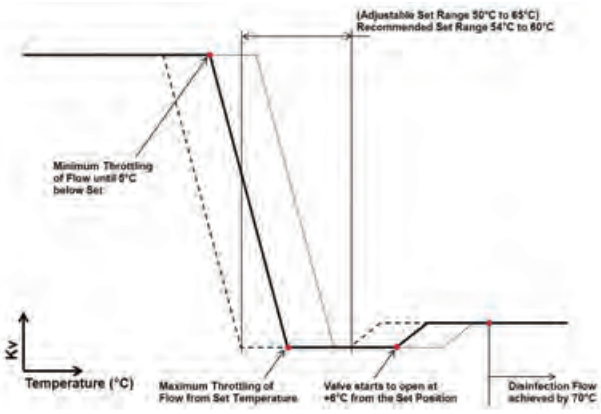

*The performance chart above indicates the shift in thermal reaction when the temperature set point of 57°C is altered.

Every effort has been made to ensure that the information contained in this publication is accurate at the time of publishing.
Hattersley Ltd assumes no responsibility or liability for typographical errors or omissions or for any misinterpretation of the information within the publication and reserves the right to change without notice.

211015

Technical Helpline UK: 0845 604 1790 MEA: +971 4 816 5800
Email UK: tech-enquiries@hattersley.com
MEA: mena-techenquiries@hattersley.com

Fig. 2900 & 2910
Thermal Circulation Valves

SELECTION & INSTALLATION GUIDE

Hattersley have developed a dedicated computer program to correctly size the valves proportioning the heat loss throughout the circuits, based on a heat loss calculation. The program produces a complete schedule indicating circuit reference, Hattersley figure numbers and flow rates (Fig. 1). Customers drawings are then marked up showing circuit reference making it easier to order and install correctly (Fig. 2).

Thermal Circulation Valves are located in the DHWS return pipework (Fig. 3).

FIG. 2 - CIRCUIT REFERENCE

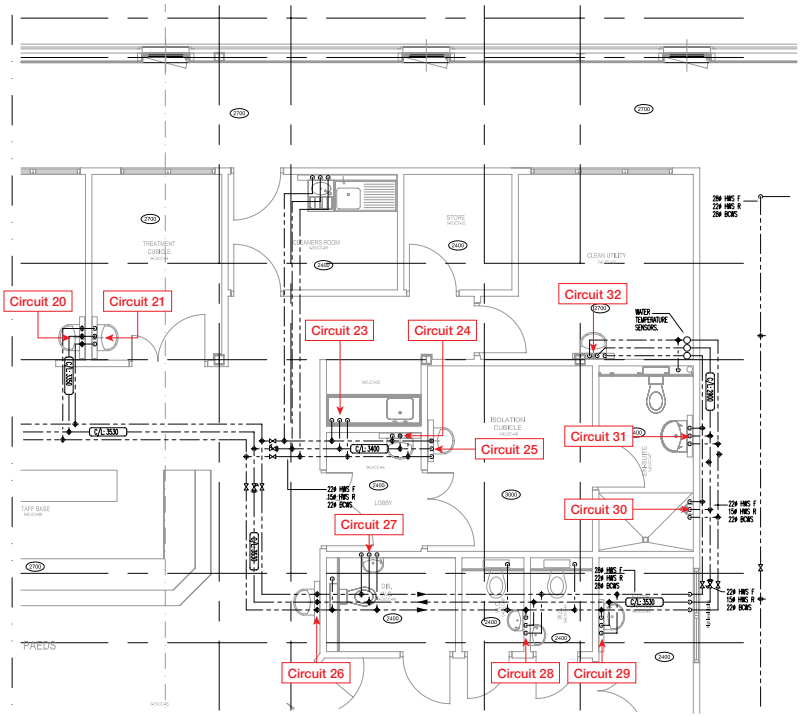

FIG. 1 - SCHEDULE

Circuit Ref	Valve	Flowrate: l/s
23	Fig. 2910/15	0.005
24	Fig. 2910/15	0.005
25	Fig. 2910/15	0.005
26	Fig. 2900/15	0.015
27	Fig. 2900/15	0.015
28	Fig. 2900/15	0.016
29	Fig. 2900/15	0.015
30	Fig. 2900/15	0.015
31	Fig. 2900/15	0.015
32	Fig. 2900/15	0.016

FIG. 3 - RETURN PIPEWORK

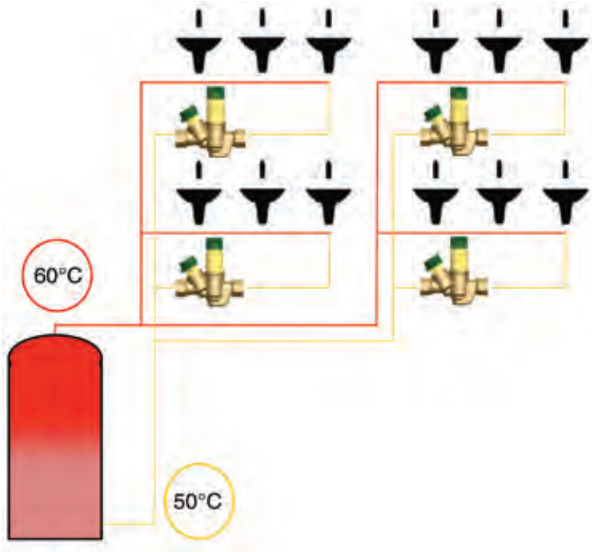

Every effort has been made to ensure that the information contained in this publication is accurate at the time of publishing.
Hattersley Ltd assumes no responsibility or liability for typographical errors or omissions or for any misinterpretation of the information within the publication and reserves the right to change without notice.

211015

Fig. 77
Thermostatic Mixing Valve

FEATURES & BENEFITS

- Blends hot and cold water to ensure constant, controlled safe outlet temperature
- Fulfils the 'duty of care' requirements against scalding
- Ideal for healthcare, schools, workplace and domestic environments
- Flat face union ensures easy removal for maintenance
- Integral strainers and check valves
- Tamper proof adjustment
- WRAS Approved maximum operating temperature 85°C

MATERIAL SPECIFICATION

Component	Material	Specification ASTM	Specification BS EN
Body	Chrome Plated DZR Brass	CW602N	
Bonnet	Chrome Plated DZR Brass	CW602N	
Check Valve	Body - POM O-ring - EPDM Spring - Stainless Steel	- - AISI304	 BS EN 10088-3 Grade1.4301
Cap	ABS	-	
Element	-	-	
Water Flow Directors	PSU	-	
Spring	Stainless Steel	AISI304	BS EN 10088-3 Grade 1.4301
O-Ring	EPDM	-	
Strainer	Stainless Steel	AISI304	BS EN 10088-3 Grade 1.4301
Compression Olive	Brass	CW507L	

LIMITS OF USE

Hattersley Fig. 77 valves have been approved for use on the following designated systems:

High Pressure (HP)	Low Pressure (HP)	Application	Max. Mixed Temperature
HP-B	LP-B	Bidet	38°c
HP-S	LP-S	Shower	41°c
HP-W	LP-W	Wash Basin	41°c
HP-T (TMV2)	-	Bath	44°c
HP-T44 (TMV3)	-	Bath	44°c

DIMENSIONAL DRAWING

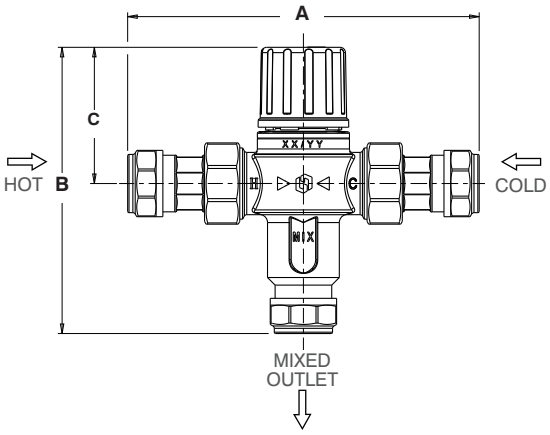

DIMENSIONS & WEIGHTS

Nom Size	mm	15	22
A	mm	131	155
B	mm	108	110
C	mm	51	51
Weight	kg	0.49	0.68

FACTORY SETTING
41°C

TEMPERATURE SETTING RANGE
30-50°C

MINIMUM HOT TO MIX TEMPERATURE
12°C

COLD WATER SUPPLY TEMPERATURE:
5-25°C

HOT WATER SUPPLY TEMPERATURE:
55-65°C

TEMPERATURE STABILITY
±2°C

MAXIMUM WORKING PRESSURE
10 bar

SPECIFICATION
Pressure Rating: PN10.

Operator: Lockshield.

Supply Pressure Imbalance Dynamic: 2:1

Figure 77 Thermostatic Mixing Valve is certified under the NSF TMV2 & TMV3 schemes and is a WRAS approved product listed in the WRAS Approvals Directory.

Every effort has been made to ensure that the information contained in this publication is accurate at the time of publishing.
Hattersley Ltd assumes no responsibility or liability for typographical errors or omissions or for any misinterpretation of the information within the publication and reserves the right to change without notice.

160222

Technical Helpline UK: 0845 604 1790 MEA: +971 4 816 5800
Email UK: tech-enquiries@hattersley.com
MEA: mena-techenquiries@hattersley.com

Fig. 78
Thermostatic Mixing Valve

FEATURES & BENEFITS

- Blends hot and cold water to ensure constant, controlled safe outlet temperature
- Fulfils the 'duty of care' requirements against scalding
- Ideal for healthcare, schools, workplace and domestic environments
- Flat face union ensures easy removal for maintenance
- Integral strainers and check valves
- Tamper proof adjustment
- Includes ball valves for isolation
- WRAS Approved maximum operating temperature 85°C

Component	Material	Specification ASTM	BS EN
Body	Chrome Plated DZR Brass	CW602N	
Bonnet	Chrome Plated DZR Brass	CW602N	
Check Valve	Body - POM O-ring - EPDM Spring - Stainless Steel	- - AISI304	BS EN 10088-3 Grade 1.4301
Cap	ABS	-	
Element	-	-	
Strainer	Stainless Steel	AISI304	BS EN 10088-3 Grade 1.4301
Water Flow Directors	PSU	-	
Spring	Stainless Steel	AISI304	BS EN 10088-3 Grade 1.4301
O-Ring	EPDM	-	
Ball	Chrome Plated Brass	CW607N	
T-Handle	Al Alloy	-	
Ball Seat	PTFE	-	
Compression Olive	Brass	CW507L	

LIMITS OF USE

Hattersley Fig. 78 valves have been approved for use on the following designated systems:

High Pressure (HP)	Low Pressure (HP)	Application	Max. Mixed Temperature
HP-B	LP-B	Bidet	38°c
HP-S	LP-S	Shower	41°c
HP-W	LP-W	Wash Basin	41°c
HP-T (TMV2)	-	Bath	44°c
HP-T44 (TMV3)	-	Bath	44°c

DIMENSIONAL DRAWING

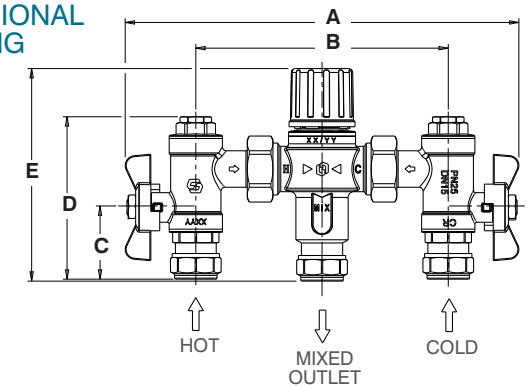

DIMENSIONS & WEIGHTS

Nom Size	mm	15	22
A	mm	200	200
B	mm	128	129
C	mm	36	38
D	mm	82	86
E	mm	108	110
Weight	kg	0.82	1.01

FACTORY SETTING
41°C

TEMPERATURE SETTING RANGE
30-50°C

MINIMUM HOT TO MIX TEMPERATURE
12°C

COLD WATER SUPPLY TEMPERATURE:
5-25°C

HOLD WATER SUPPLY TEMPERATURE:
55-65°C

TEMPERATURE STABILITY
±2°C

MAXIMUM WORKING PRESSURE
10 bar

SPECIFICATION

Pressure Rating: PN10.

Operator: Lockshield.

Supply Pressure Imbalance Dynamic: 2:1

Figure 78 Thermostatic Mixing Valve is certified under the NSF TMV2 & TMV3 schemes and is a WRAS approved product listed in the WRAS Approvals Directory.

Every effort has been made to ensure that the information contained in this publication is accurate at the time of publishing. Hattersley Ltd assumes no responsibility or liability for typographical errors or omissions or for any misinterpretation of the information within the publication and reserves the right to change without notice.

160222

Hattersley®

Technical Helpline UK: 0845 604 1790 MEA: +971 4 816 5800
Email UK: tech-enquiries@hattersley.com
MEA: mena-techenquiries@hattersley.com

Project: Ricoh Arena, Coventry

Sector: Sports

Client: Coventry Football Club

Contractor: Haden Young

Specification: Hattersley Hook-Up and commissioning valves

For the past six years, Hattersley Hook-Up units and commissioning valves have been heating and cooling the 32,000 seat Ricoh Arena that is home to Coventry City FC. The site also comprises an exhibition hall, a hotel, a leisure club, a casino, and one of the UK's largest Tesco Extra supermarkets.

Throughout the stadium Hook-Up flow management modules, part of Hattersley's extensive range of commissioning valves, are providing heating and air-conditioning.

The units provide precise flow control, flow measurement, system and coil flushing and isolation capabilities from a single compact and lightweight unit. Built from bronze and DZR brass they can be used for chilled and heating water systems from -10°C to 120°C.

Flange Tables

This information is extracted from the following European, British and American standards:

- BS EN 1092 Circular flanges for pipes, valves, fittings and accessories, PN designated Part 1 Steel flanges.
- Part 2 Cast iron flanges.
- BS 4504 Flanges and bolting for pipes, valves, and fittings metric series (for copper alloy flanges only).
- ANSI B16.1 Cast Iron pipe flanges and flanged fittings.
- ANSI B16.5 Steel pipe flanges and flanged fittings.
- ANSI B16.24 Bronze flanges and flanged fittings BS10 Flanges and bolting for pipes, valves and fittings.

Notes:

1. Raised joint faces are applicable to BS EN 1092-1, BS EN 1092-2, BS10 ANSI table H steel, and classes 150 to 1500 inclusive.
2. ANSI Class 125 refers to cast iron only.
3. ANSI 600, 900, 1500 flange thickness does not include raised face.
4. Dimensions for flanges to BS EN 1092 are given in millimetres only. Dimensions for ANSI and BS 10 flanges are shown in inches with the metric equivalent (to nearest whole millimetre) in brackets.

Nominal Size 1/2" (15mm)

BS EN 1092	Dia. of flange	Bolt circle diameter	No. of bolts	Dia. of bolts	Dia. of holes	Dia. of raised face*** Iron	Dia. of raised face*** Steel	Height of raised face(3)	Thickness of flange			
									Grey Cast Iron	Copper Alloy	Cast and Forged Steel	Ductile Cast Iron
PN6	80	55	4	M10	11	38	40	2	12*	-	12	-
PN10	95	65	4	M12	14	46	45	2	14*	-	16	14
PN16	95	65	4	M12	14	46	45	2	14*	6**	16	14
PN25	95	65	4	M12	14	46	45	2	16*	8**	16	14
PN40	95	65	4	M12	14	46	45	2	-	9**	16	16
PN64	105	75	4	M12	14	-	45	2	-	-	20	-
ANSI												
Class 125/150	3 1/2 (89)	2 3/8 (60)	4	1/2 (13)	5/8 (16)	-	1 3/8 (35)	1/16 (2)	-	5/16 (8)	7/16 (11)	-
Class 300	3 3/4 (95)	2 5/8 (67)	4	1/2 (13)	5/8 (16)	-	1 3/8 (35)	1/16 (2)	-	1/2 (13)	1/2 (13)	-
Class 600	3 3/4 (95)	2 5/8 (67)	4	1/2 (13)	5/8 (16)	-	1 3/8 (35)	1/4 (6)	-	-	9/16 (14)	-
Class 900	4 3/4 (121)	3 1/4 (83)	4	3/4 (19)	7/8 (22)	-	1 3/8 (35)	1/4 (6)	-	-	7/8 (22)	-
Class 1500	4 3/4 (121)	3 1/4 (83)	4	3/4 (19)	7/8 (22)	-	1 3/8 (35)	1/4 (6)	-	-	7/8 (22)	-
BS 10												
Table A	3 3/4 (95)	2 5/8 (67)	4	1/2 (13)	9/16 (14)	-	-	-	1/2 (13)	1/4 (6)	-	-
Table D	3 3/4 (95)	2 5/8 (67)	4	1/2 (13)	9/16 (14)	-	-	-	1/2 (13)	1/4 (6)	3/8 (10)	-
Table E	3 3/4 (95)	2 5/8 (67)	4	1/2 (13)	9/16 (14)	-	-	-	1/2 (13)	1/4 (6)	3/8 (10)	-
Table F	3 3/4 (95)	2 5/8 (67)	4	1/2 (13)	9/16 (14)	-	-	-	1/2 (13)	5/16 (8)	3/8 (10)	-
Table H	4 1/2 (114)	3 1/4 (83)	4	5/8 (16)	11/16 (17)	-	2 1/4 (57)	1/16 (2)	5/8 (16)	3/8 (10)	1/2 (13)	-

* These flange thicknesses are also valid for ductile iron flanges type 21-2 ** Flange thicknesses for copper alloy are from BS 4504
***Copper alloy flanges are always flat-faced

120121

Hattersley®
Technical Helpline UK: 0845 604 1790 MEA: +971 4 816 5800
Email UK: tech-enquiries@hattersley.com
MEA: mena-techenquiries@hattersley.com

Nominal Size 3/4" (20mm)

BS EN 1092	Dia. of flange	Bolt circle diameter	No. of bolts	Dia. of bolts	Dia. of holes	Dia. of raised face*** Iron	Dia. of raised face*** Steel	Height of raised face(3)	Thickness of flange			
									Grey Cast Iron	Copper Alloy	Cast and Forged Steel	Ductile Cast Iron
PN6	90	65	4	M10	11	48	50	2	14*	-	14	-
PN10	105	75	4	M12	14	56	58	2	16*	-	18	16
PN16	105	75	4	M12	14	56	58	2	16*	6**	18	16
PN25	105	75	4	M12	14	56	58	2	18*	8**	18	16
PN40	105	75	4	M12	14	56	58	2	-	9**	18	18
PN64	130	90	4	M16	18	-	58	2	-	-	22	-
PN100	130	90	4	M16	18	-	58	2	-	-	22	-
ANSI												
Class 125/150	3 7/8 (98)	2 3/4 (70)	4	1/2 (13)	5/8 (16)	-	1 11/16 (43)	1/16 (2)	-	11/32 (9)	9/16 (14)	-
Class 300	4 5/8 (117)	3 1/4 (83)	4	5/8 (16)	3/4 (19)	-	1 11/16 (43)	1/16 (2)	-	17/32 (13)	5/8 (16)	-
Class 600	4 5/8 (117)	3 1/4 (83)	4	5/8 (16)	3/4 (19)	-	1 11/16 (43)	1/4 (6)	-	-	5/8 (16)	-
Class 900	5 1/8 (130)	3 1/2 (89)	4	3/4 (19)	7/8 (22)	-	1 11/16 (43)	1/4 (6)	-	-	1 (25)	-
Class 1500	5 1/8 (130)	3 1/2 (89)	4	3/4 (19)	7/8 (22)	-	1 11/16 (43)	1/4 (6)	-	-	1 (25)	-
BS 10												
Table A	4 (102)	2 7/8 (73)	4	1/2 (13)	9/16 (14)	-	-	-	1/2 (13)	1/4 (6)	-	-
Table D	4 (102)	2 7/8 (73)	4	1/2 (13)	9/16 (14)	-	-	-	1/2 (13)	1/4 (6)	3/8 (10)	-
Table E	4 (102)	2 7/8 (73)	4	1/2 (13)	9/16 (14)	-	-	-	1/2 (13)	1/4 (6)	3/8 (10)	-
Table F	4 (102)	2 7/8 (73)	4	1/2 (13)	9/16 (14)	-	-	-	1/2 (13)	5/16 (8)	3/8 (10)	-
Table H	4 1/2 (114)	3 1/4 (83)	4	5/8 (16)	11/16 (17)	-	2 1/4 (57)	1/16 (2)	5/8 (16)	3/8 (10)	1/2 (13)	-

* These flange thicknesses are also valid for ductile iron flanges type 21-2 **Flange thicknesses for copper alloy are from BS 4504
*** Copper alloy flanges are always flat-faced

Nominal Size 1" (25mm)

BS EN 1092	Dia. of flange	Bolt circle diameter	No. of bolts	Dia. of bolts	Dia. of holes	Dia. of raised face*** Iron	Dia. of raised face*** Steel	Height of raised face*** Iron	Height of raised face*** Steel	Thickness of flange			
										Grey Cast Iron	Copper Alloy	Cast and Forged Steel	Ductile Cast Iron
PN 6	100	75	4	M10	11	58	60	3	2	14*	-	14	-
PN10	115	85	4	M12	14	65	68	3	2	16*	-	18	16
PN16	115	85	4	M12	14	65	68	3	2	16*	8**	18	16
PN25	115	85	4	M12	14	65	68	3	2	18*	9**	18	16
PN40	115	85	4	M12	14	65	68	3	2	-	11**	18	18
PN64	140	100	4	M16	18	-	68	-	2	-	-	24	-
PN100	140	100	4	M16	18	-	68	-	2	-	-	24	-
ANSI													
Class 125/150	4 1/4 (114)	3 1/8 (79)	4	1/2 (13)	5/8 (16)	-	2 (51)	-	1/16 (2)	7/16 (11)	3/8 (10)	7/16 (11)	9/10 (14)
Class 300	4 7/8 (124)	3 1/2 (89)	4	5/8 (16)	3/4 (19)	-	2 (51)	-	1/16 (2)	-	19/32 (15)	11/16 (17)	-
Class 600	4 7/8 (124)	3 1/2 (89)	4	5/8 (16)	3/4 (19)	-	2 (51)	-	1/4 (6)	-	-	11/16 (17)	
Class 900	5 7/8 (149)	4 (102)	4	7/8 (22)	1 (25)	-	2 (51)	-	1/4 (6)	-	-	1 1/8 (29)	-
Class 1500	5 7/8 (149)	4 (102)	4	7/8 (22)	1 (25)	-	2 (51)	-	1/4 (6)	-	-	1 1/8 (29)	-
BS 10													
Table A	4 1/2 (114)	3 1/4 (83)	4	1/2 (13)	9/16 (14)	-	-	-	-	1/2 (13)	5/16 (8)	-	-
Table D	4 1/2 (114)	3 1/4 (83)	4	1/2 (13)	9/16 (14)	-	-	-	-	1/2 (13)	5/16 (8)	3/8 (10)	-
Table E	4 1/2 (114)	3 1/4 (83)	4	1/2 (13)	9/16 (14)	-	-	-	-	1/2 (13)	5/16 (8)	3/8 (10)	-
Table F	4 3/4 (121)	3 7/16 (87)	4	5/8 (16)	11/16 (17)	-	-	-	-	1/2 (13)	3/8 (10)	3/8 (10)	-
Table H	4 3/4 (121)	3 7/16 (87)	4	5/8 (16)	11/16 (17)	-	2 1/2 (64)	-	1/16 (2)	3/4 (19)	7/16 (11)	9/16 (14)	-

* These flange thicknesses are also valid for ductile iron flanges type 21-2 ** Flange thicknesses for copper alloy are from BS 4504
*** Copper alloy flanges are always flat-faced

120121

Nominal Size 1 1/4" (32mm)

BS EN 1092	Dia. of flange	Bolt circle diameter	No. of bolts	Dia. of bolts	Dia. of holes Iron	Dia. of holes Steel	Dia. of raised face*** Iron	Dia. of raised face*** Steel	Height of raised face*** Iron	Height of raised face*** Steel	Thickness of flange			
											Grey Cast Iron	Copper Alloy	Cast and Forged Steel	Ductile Cast Iron
PN 6	120	90	4	M12	14	14	69	70	3	2	16*	-	14	-
PN10	140	100	4	M16	19	18	76	78	3	2	18*	-	18	18
PN16	140	100	4	M16	19	18	76	78	3	2	18*	8**	18	18
PN25	140	100	4	M16	19	18	76	78	3	2	20*	9**	18	18
PN40	140	100	4	M16	19	18	76	78	3	2	-	11**	18	20
PN64	155	110	4	M20	-	22	-	78	-	2	-	-	26	-
PN100	155	110	4	M20	-	22	-	78	-	2	-	-	26	-
ANSI														
Class 125/150	4 5/8 (117)	3 1/2 (89)	4	1/2 (13)	5/8 (16)	5/8 (16)	-	2 1/2 (64)	-	1/16 (2)	1/2 (13)	13/32 (10)	1/2 (13)	5/8 (16)
Class 300	5 1/4 (133)	3 7/8 (98)	4	5/8 (16)	-	3/4 (19)	-	2 1/2 (64)	-	1/16 (2)	-	5/8 (16)	3/4 (19)	-
Class 600	5 1/4 (133)	3 7/8 (98)	4	5/8 (16)	-	3/4 (19)	-	2 1/2 (64)	-	1/4 (6)	-	-	13/16 (21)	-
Class 900	6 1/4 (159)	4 3/8 (111)	4	7/8 (22)	-	1 (25)	-	2 1/2 (64)	-	1/4 (6)	-	-	1 1/8 (29)	-
Class 1500	6 1/4 (159)	4 3/8 (111)	4	7/8 (22)	-	1 (25)	-	2 1/2 (64)	-	1/4 (6)	-	-	1 1/8 (29)	-
BS 10														
Table A	4 3/4 (121)	3 7/16 (87)	4	1/2 (13)	9/16 (14)	9/16 (14)	-	-	-	-	5/8 (16)	5/16 (8)	-	-
Table D	4 3/4 (121)	3 7/16 (87)	4	1/2 (13)	9/16 (14)	9/16 (14)	-	-	-	-	5/8 (16)	5/16 (8)	1/2 (13)	-
Table E	4 3/4 (121)	3 7/16 (87)	4	1/2 (13)	9/16 (14)	9/16 (14)	-	-	-	-	5/8 (16)	5/16 (8)	1/2 (13)	-
Table F	5 1/4 (133)	3 7/8 (98)	4	5/8 (16)	11/16 (17)	11/16 (17)	-	-	-	-	5/8 (16)	3/8 (10)	1/2 (13)	-
Table H	5 1/4 (133)	3 7/8 (98)	4	5/8 (16)	11/16 (17)	11/16 (17)	-	3 (76)	-	1/16 (2)	7/8 (22)	7/16 (11)	11/16 (17)	-

* These flange thicknesses are also valid for ductile iron flanges type 21-2 ** Flange thicknesses for copper alloy are from BS 4504
*** Copper alloy flanges are always flat-faced

Nominal Size 1 1/2" (40mm)

BS EN 1092	Dia. of flange	Bolt circle diameter	No. of bolts	Dia. of bolts	Dia. of holes Iron	Dia. of holes Steel	Dia. of raised face*** Iron	Dia. of raised face*** Steel	Height of raised face*** Iron	Height of raised face*** Steel	Thickness of flange			
											Grey Cast Iron	Copper Alloy	Cast and Forged Steel	Ductile Cast Iron
PN6	130	100	4	M12	14	14	78	80	3	2	16*	-	14	-
PN10	150	110	4	M16	19	18	84	88	3	2	18*	-	18	19
PN16	150	110	4	M16	19	18	84	88	3	2	18*	9**	18	19
PN25	150	110	4	M16	19	18	84	88	3	2	20*	11**	18	19
PN40	150	110	4	M16	19	18	84	88	3	2	-	13 **	18	19
PN64	170	125	4	M20	-	22	-	88	-	2	-	-	28	-
PN100	170	125	4	M20	-	22	-	88	-	2	-	-	28	-
ANSI														
Class 125/150	5 (127)	3 7/8 (98)	4	1/2 (13)	5/8 (16)	5/8 (16)	-	2 7/8 (73)	-	1/16 (2)	9/16 (14)	7/16 (11)	9/16 (14)	11/16 (17)
Class 300	6 1/8 (156)	4 1/2 (114)	4	3/4 (19)	-	7/8 (22)	-	2 7/8 (73)	-	1/16 (2)	-	11/16 (17)	13/16 (21)	-
Class 600	6 1/8 (156)	4 1/2 (114)	4	3/4 (19)	-	7/8 (22)	-	2 7/8 (73)	-	1/4 (6)	-	-	7/8 (22)	-
Class 900	7 (178)	4 7/8 (124)	4	1 (25)	-	1 1/8 (29)	-	2 7/8 (73)	-	1/4 (6)	-	-	1 1/4 (32)	-
Class 1500	7 (178)	4 7/8 (124)	4	1 (25)	-	1 1/8 (29)	-	2 7/8 (73)	-	1/4 (6)	-	-	1 1/4 (32)	-
BS 10														
Table A	5 1/4 (133)	3 7/8 (98)	4	1/2 (13)	9/16 (14)	9/16 (14)	-	-	-	-	5/8 (16)	3/8 (10)	-	-
Table D	5 1/4 (133)	3 7/8 (98)	4	1/2 (13)	9/16 (14)	9/16 (14)	-	-	-	-	5/8 (16)	3/8 (10)	1/2 (13)	-
Table E	5 1/4 (133)	3 7/8 (98)	4	1/2 (13)	9/16 (14)	9/16 (14)	-	-	-	-	5/8 (16)	3/8 (10)	1/2 (13)	-
Table F	5 1/2 (140)	4 1/8 (105)	4	5/8 (16)	11/16 (17)	11/16 (17)	-	-	-	-	5/8 (16)	7/16 (11)	1/2 (13)	-
Table H	5 1/2 (140)	4 1/8 (105)	4	5/8 (16)	11/16 (17)	11/16 (17)	-	3 1/4 (83)	-	1/16 (2)	7/8 (22)	1/2 (13)	11/16 (17)	-

* These flange thicknesses are also valid for ductile iron flanges type 21-2 ** Flange thicknesses for copper alloy are from BS 4504
*** Copper alloy flanges are always flat-faced

120121

Hattersley®
Technical Helpline UK: 0845 604 1790 MEA: +971 4 816 5800
Email UK: tech-enquiries@hattersley.com
MEA: mena-techenquiries@hattersley.com

Nominal Size 2”(50mm)

BS EN 1092	Dia. of flange	Bolt circle diameter	No. of bolts	Dia. of bolts	Dia. of holes Iron	Dia. of holes Steel	Dia. of raised face*** Iron	Dia. of raised face*** Steel	Height of raised face*** Iron	Height of raised face*** Steel	Thickness of flange			
											Grey Cast Iron	Copper Alloy	Cast and Forged Steel	Ductile Cast Iron
PN 6	140	110	4	M12	14	14	88	90	3	2	16*	-	14	-
PN10	165	125	4	M16	19	18	99	102	3	2	20*	-	18	19
PN16	165	125	4	M16	19	18	99	102	3	2	20*	11**	18	19
PN25	165	125	4	M16	19	18	99	102	3	2	22 (*	11**	20	19
PN40	165	125	4	M16	19	18	99	102	3	2	-	13**	20	19
PN64	180	135	4	M20	-	22	-	102	-	2	-	-	26	-
PN100	195	145	4	M24	-	26	-	102	-	2	-	-	30	-
ANSI														
Class 125/150	6 (152)	4 3/4 (121)	4	5/8 (16)	3/4 (19)	3/4 (19)	-	3 5/8 (92)	-	1/16 (2)	5/8 (16)	1/2 (13)	5/8 (16)	-
Class 300	6 1/2 (165)	5 (127)	8	5/8 (16)	-	3/4 (19)	-	3 5/8 (92)	-	1/16 (2)	-	3/4 (19)	7/8 (22)	-
Class 600	6 1/2 (165)	5 (127)	8	5/8 (16)	-	3/4 (19)	-	3 5/8 (92)	-	1/4 (6)	-	- 1	(25)	-
Class 900	8 1/2 (216)	6 1/2 (165)	8	7/8 (22)	-	1 (25)	-	3 5/8 (92)	-	1/4 (6)	-	- 1	1/2 (38)	-
Class 1500	8 1/2 (216)	6 1/2 (165)	8	7/8 (22)	-	1 (25)	-	3 5/8 (92)	-	1/4 (6)	-	- 1	1/2 (38)	-
BS 10														
Table A	6 (152)	4 1/2 (114)	4	5/8 (16)	11/16 (17)	11/16 (17)	-	-	-	-	5/8 (16)	3/8 (10)	-	-
Table D	6 (152)	4 1/2 (114)	4	5/8 (16)	11/16 (17)	11/16 (17)	-	-	-	-	11/16 (17)	3/8 (10)	9/16 (14)	-
Table E	6 (152)	4 1/2 (114)	4	5/8 (16)	11/16 (17)	11/16 (17)	-	-	-	-	3/4 (19)	3/8 (10)	9/16 (14)	-
Table F	6 1/2 (165)	5 (127)	4	5/8 (16)	11/16 (17)	11/16 (17)	-	-	-	-	3/4 (19)	7/16 (11)	5/8 (16)	-
Table H	6 1/2 (165)	5 (127)	4	5/8 (16)	11/16 (17)	11/16 (17)	-	4 (102)	-	1/16 (2)	1 (25)	1/2 (13)	3/4 (19)	-

* These flange thicknesses are also valid for ductile iron flanges type 21-2 ** Flange thicknesses for copper alloy are from BS 4504
*** Copper alloy flanges are always flat-faced

Nominal Size 2 1/2” (65mm)

BS EN 1092	Dia. of flange	Bolt circle diameter	No. of bolts	Dia. of bolts	Dia. of holes Iron	Dia. of holes Steel	Dia. of raised face*** Iron	Dia. of raised face*** Steel	Height of raised face*** Iron	Height of raised face*** Steel	Thickness of flange			
											Grey Cast Iron	Copper Alloy	Cast and Forged Steel	Ductile Cast Iron
PN 6	160	130	4	M12	14	14	108	110	2	3	16*	-	14	-
PN 10	185	145	4**	M16	19	18	118	122	2	3	20*	-	18	19
PN 16	185	145	4**	M16	19	18	118	122	2	3	20*	13	18	19
PN 25	185	145	8	M16	19	18	118	122	2	3	24*	13	22	19
PN 40	185	145	8	M16	19	18	118	122	2	3	-	14	22	19
PN 64	205	160	8	M20	-	22	-	122	2	-	-	-	26	-
PN 100	220	170	8	M24	-	26	-	122	2	-	-	-	34	-
ANSI														
Class 125/150	7 (178)	5 1/2 (140)	4	5/8 (16)	3/4 (19)	3/4 (19)	-	4 1/8 (105)	-	1/16 (2)	11/16 (17)	9/16 (14)	11/16 (17)	-
Class 300	7 1/2 (191)	5 7/8 (149)	8	3/4 (19)	-	7/8 (22)	-	4 1/8 (105)	-	1/16 (2)	-	13/16 (21)	1 (25)	-
Class 600	7 1/2 (191)	5 7/8 (149)	8	3/4 (19)	-	7/8 (22)	-	4 1/8 (105)	-	1/4 (6)	-	-	1 1/8 (29)	-
Class 900	9 5/8 (244)	7 1/2 (191)	8	1 (25)	-	1 1/8 (29)	-	4 1/8 (105)	-	1/4 (6)	-	-	1 5/8 (41)	-
Class 1500	9 5/8 (244)	7 1/2 (191)	8	1 (25)	-	1 1/8 (29)	-	4 1/8 (105)	-	1/4 (6)	-	-	1 5/8 (41)	-
BS 10														
Table A	6 1/2 (165)	5 (127)	4	5/8 (16)	11/16 (17)	11/16 (17)	-	-	-	-	11/16 (17)	7/16 (11)	-	-
Table D	6 1/2 (165)	5 (127)	4	5/8 (16)	11/16 (17)	11/16 (17)	-	-	-	-	11/16 (17)	7/16 (11)	9/16 (14)	-
Table E	6 1/2 (165)	5 (127)	4	5/8 (16)	11/16 (17)	11/16 (17)	-	-	-	-	3/4 (19)	7/16 (11)	9/16 (14)	-
Table F	7 1/4 (184)	5 3/4 (146)	8	5/8 (16)	11/16 (17)	11/16 (17)	-	-	-	-	3/4 (19)	1/2 (13)	5/8 (16)	-
Table H	7 1/4 (184)	5 3/4 (146)	8	5/8 (16)	11/16 (17)	11/16 (17)	-	4 1/2 (114)	-	1/16 (2)	1 (25)	9/16 (14)	3/4 (19)	-

* These flange thicknesses are also valid for ductile iron flanges type 21-2
** Steel flanges in this DN and PN may be supplied with 8 holes. For compliance with these, equivalent cast iron flanges may be supplied with 8 holes as special order and after agreement between manufacturer and customer
***Copper alloy flanges are always flat-faced

011222

Nominal Size 3" (80mm)

BS EN 1092	Dia. of flange	Bolt circle diameter	No. of bolts	Dia. of bolts	Dia. of holes Iron	Dia. of holes Steel	Dia. of raised face*** Iron	Dia. of raised face*** Steel	Height of raised face*** Iron	Height of raised face*** Steel	Thickness of flange			
											Grey Cast Iron	Copper Alloy	Cast and Forged Steel	Ductile Cast Iron
PN 6	190	150	4	M16	19	18	124	128	3	2	18*	-	16	-
PN10	200	160	8	M16	19	18	132	138	3	2	22*	-	20	19
PN16	200	160	8	M16	19	18	132	138	3	2	22*	13**	20	19
PN25	200	160	8	M16	19	18	132	138	3	2	26*	14**	24	19
PN40	200	160	8	M16	19	18	132	138	3	2	-	16**	24	19
PN64	215	170	8	M20	-	22	-	138	-	2	-	-	28	-
PN100	230	180	8	M24	-	26	-	138	-	2	-	-	36	-
ANSI														
Class 125/150	7 1/2 (191)	6 (152)	4	5/8 (16)	3/4 (19)	3/4 (19)	-	5 (127)	-	1/16 (2)	3/4 (19)	5/8 (16)	3/4 (19)	-
Class 300	8 1/4 (210)	6 5/8 (168)	8	3/4 (19)	-	7/8 (22)	-	5 (127)	-	1/16 (2)	-	29/32 (23)	1 1/8 (29)	-
Class 600	8 1/4 (210)	6 5/8 (168)	8	3/4 (19)	-	7/8 (22)	-	5 (127)	-	1/4 (6)	-	-	1 1/4 (32)	-
Class 900	9 1/2 (241)	7 1/2 (192)	8	7/8 (22)	-	1 (25)	-	5 (127)	-	1/4 (6)	-	-	1 1/2 (38)	-
Class 1500	10 1/2 (267)	8 (203)	8	1 1/8 (29)	-	1 1/4 (32)	-	5 (127)	-	1/4 (6)	-	-	1 7/8 (48)	-
BS 10														
Table A	7 1/4 (184)	5 3/4 (146)	4	5/8 (16)	11/16 (17)	11/16 (17)	-	-	-	-	11/16 (17)	1/2 (13)	-	-
Table D	7 1/4 (184)	5 3/4 (146)	4	5/8 (16)	11/16 (17)	11/16 (17)	-	-	-	-	3/4 (19)	1/2 (13)	9/16 (14)	-
Table E	7 1/4 (184)	5 3/4 (146)	4	5/8 (16)	11/16 (17)	11/16 (17)	-	-	-	-	3/4 (19)	1/2 (13)	9/16 (14)	-
Table F	8 (203)	6 1/2 (165)	8	5/8 (16)	11/16 (17)	11/16 (17)	-	-	-	-	3/4 (19)	9/16 (14)	5/8 (16)	-
Table H	8 (203)	6 1/2 (165)	8	5/8 (16)	11/16 (17)	11/16 (17)	-	5 (127)	-	1/16 (2)	1 1/8 (29)	5/8 (16)	7/8 (22)	-

* These flange thicknesses are also valid for ductile iron flanges type 21-2 ** Flange thicknesses for copper alloy are from BS 4504
*** Copper alloy flanges are always flat-faced

Nominal Size 4" (100mm)

BS EN 1092	Dia. of flange	Bolt circle diameter	No. of bolts	Dia. of bolts	Dia. of holes Iron	Dia. of holes Steel	Dia. of raised face*** Iron	Dia. of raised face(Steel	Height of raised face*** Iron	Height of raised face*** Steel	Thickness of flange			
											Grey Cast Iron	Copper Alloy	Cast and Forged Steel	Ductile Cast Iron
PN 6	210	170	4	M16	19	18	144	148	3	2	18*	-	16	-
PN10	220	180	8	M16	19	18	156	158	3	2	24*	-	20	19
PN16	220	180	8	M16	19	18	156	158	3	2	24*	16**	20	19
PN25	235	190	8	M20	23	22	156	162	3	2	28*	17**	24	19
PN40	235	190	8	M20	23	22	156	162	3	2	-	19**	24	19
PN64	250	200	8	M24	-	26	-	162	-	2	-	-	30	-
PN100	265	210	8	M27	-	30	-	162	-	2	-	-	40	-
ANSI														
Class 125/150	9 (229)	7 1/2 (191)	8	5/8 (16)	3/4 (19)	3/4 (19)	-	6 3/16 (157)	-	1/16 (2)	15/16 (24)	11/16 (17)	15/16 (24)	-
Class 300	10 (254)	7 7/8 (200)	8	3/4 (19)	-	7/8 (22)	-	6 3/16 (157)	-	1/16 (2)	-	11/16 (27)	1 1/4 (32)	-
Class 600	10 3/4 (273)	8 1/2 (216)	8	7/8 (22)	-	1 (25)	-	6 3/16 (157)	-	1/4 (6)	-	-	1 1/2 (38)	-
Class 900	11 1/2 (292)	9 1/4 (235)	8	1 1/8 (29)	-	1 1/4 (32)	-	6 3/16 (157)	-	1/4 (6)	-	-	1 3/4 (44)	-
Class 1500	12 1/4 (311)	9 1/2 (241)	8	1 1/4 (32)	-	1 3/8 (35)	-	6 3/16 (157)	-	1/4 (6)	-	-	2 1/8 (54)	-
BS 10														
Table A	8 1/2 (216)	7 (178)	4	5/8 (16)	11/16 (17)	11/16 (17)	-	-	-	-	3/4 (19)	5/8 (16)	-	-
Table D	8 1/2 (216)	7 (178)	4	5/8 (16)	11/16 (17)	11/16 (17)	-	-	-	-	3/4 (19)	5/8 (16)	11/16 (17)	-
Table E	8 1/2 (216)	7 (178)	8	5/8 (16)	11/16 (17)	11/16 (17)	-	-	-	-	7/8 (22)	5/8 (16)	11/16 (17)	-
Table F	9 (229)	7 1/2 (191)	8	5/8 (16)	11/16 (17)	11/16 (17)	-	-	-	-	7/8 (22)	11/16 (17)	3/4 (19)	-
Table H	9 (229)	7 1/2 (191)	8	5/8 (16)	11/16 (17)	11/16 (17)	-	6 (152)	-	1/16 (2)	1 1/4 (32)	3/4 (19)	1 (25)	-

* These flange thicknesses are also valid for ductile iron flanges type 21-2 ** Flange thicknesses for copper alloy are from BS 4504
*** Copper alloy flanges are always flat-faced

120121

Hattersley®
Technical Helpline UK: 0845 604 1790 MEA: +971 4 816 5800
Email UK: tech-enquiries@hattersley.com
MEA: mena-techenquiries@hattersley.com

Nominal Size 5" (125mm)

BS EN 1092	Dia. of flange	Bolt circle diameter	No. of bolts	Dia. of bolts	Dia. of holes Iron	Dia. of holes Steel	Dia. of raised face*** Iron	Dia. of raised face*** Steel	Height of raised face*** Iron	Height of raised face*** Steel	Thickness of flange			
											Grey Cast Iron	Copper Alloy	Cast and Forged Steel	Ductile Cast Iron
PN 6	240	200	8	M16	19	18	174	178	3	2	20*	-	18	-
PN10	250	210	8	M16	19	18	184	188	3	2	26*	-	22	19
PN16	250	210	8	M16	19	18	184	188	3	2	26*	-	22	19
PN25	270	220	8	M24	28	26	184	188	3	2	30*	-	26	19
PN40	270	220	8	M24	28	26	184	188	3	2	-	-	26	23.5
PN64	295	240	8	M27	-	30	-	188	-	2	-	-	34	-
PN100	315	250	8	M30	-	33	-	188	-	2	-	-	40	-
ANSI														
Class 125/150	10 (254)	8 1/2 (216)	8	3/4 (19)	7/8 (22)	7/8 (22)	-	7 5/16 (186)	-	1/16 (2)	5/16 (24)	3/4 (19)	5/16 (24)	-
Class 300	11 (279)	9 1/4 (235)	8	3/4 (19)	-	7/8 (22)	-	7 5/16 (186)	-	1/16 (2)	-	1 1/8 (29)	1 3/8 (35)	-
Class 600	13 (330)	10 1/2 (267)	8	1 (25)	-	1 1/8 (29)	-	7 5/16 (186)	-	1/4 (6)	-	-	1 3/4 (44)	-
Class 900	13 3/4 (349)	11 (279)	8	1 1/4 (32)	-	1 3/8 (35)	-	7 5/16 (186)	-	1/4 (6)	-	-	2 (51)	-
Class 1500	14 3/4 (375)	11 1/2 (292)	8	1 1/2 (38)	-	1 5/8 (41)	-	7 5/16 (186)	-	1/4 (6)	-	-	2 7/8 (73)	-
BS 10														
Table A	10 (254)	8 1/4 (210)	4	5/8 (16)	11/16 (17)	11/16 (17)	-	-	-	-	3/4 (19)	11/16 (17)	-	-
Table D	10 (254)	8 1/4 (210)	8	5/8 (16)	11/16 (17)	11/16 (17)	-	-	-	-	13/16 (21)	11/16 (17)	11/16 (17)	-
Table E	10 (254)	8 1/4 (210)	8	5/8 (16)	11/16 (17)	11/16 (17)	-	-	-	-	7/8 (22)	11/16 (17)	11/16 (17)	-
Table F	11 (279)	9 1/4 (235)	8	3/4 (19)	7/8 (22)	7/8 (22)	-	-	-	-	1 (25)	3/4 (19)	7/8 (22)	-
Table H	11 (279)	9 1/4 (235)	8	3/4 (19)	7/8 (22)	7/8 (22)	-	7 (178)	-	1/16 (2)	1 3/8 (35)	7/8 (22)	1 1/8 (29)	-

* These flange thicknesses are also valid for ductile iron flanges type 21-2

*** Copper alloy flanges are always flat-faced

Nominal Size 6" (150mm)

BS EN 1092	Dia. of flange	Bolt circle diameter	No. of bolts	Dia. of bolts	Dia. of holes Iron	Dia. of holes Steel	Dia. of raised face*** Iron	Dia. of raised face*** Steel	Height of raised face*** Iron	Height of raised face*** Steel	Thickness of flange			
											Grey Cast Iron	Copper Alloy	Cast and Forged Steel	Ductile Cast Iron
PN6	265	225	8	M16	19	18	199	202	3	2	20*	-	18	-
PN10	285	240	8	M20	23	22	211	212	3	2	26*	-	22	19
PN16	285	240	8	M20	23	22	211	212	3	2	26*	-	22	19
PN25	300	250	8	M24	28	26	211	218	3	2	34*	-	28	20
PN40	300	250	8	M24	28	26	211	218	3	2	-	-	28	26
PN64	345	280	8	M30	-	33	-	218	-	2	-	-	36	-
PN100	355	290	12	M30	-	33	-	218	-	2	-	-	44	-
ANSI														
Class 125/150	11 (279)	9 1/2 (241)	8	3/4 (19)	7/8 (22)	7/8 (22)	-	8 1/2 (216)	-	1/16 (2)	1 (25)	13/16 (21)	1 (25)	-
Class 300	12 1/2 (318)	10 5/8 (270)	12	3/4 (19)	-	7/8 (22)	-	8 1/2 (216)	-	1/16 (2)	-	13/16 (30)	1 7/16 (37)	-
Class 600	14 (356)	11 1/2 (292)	12	1 (25)	-	1 1/8 (29)	-	8 1/2 (216)	-	1/4 (6)	-	-	1 7/8 (48)	-
Class 900	15 (381)	12 1/2 (318)	12	1 1/8 (29)	-	1 1/4 (32)	-	8 1/2 (216)	-	1/4 (6)	-	-	2 3/16 (56)	-
Class 1500	15 1/2 (394)	12 1/2 (318)	12	1 3/8 (35)	-	1 1/2 (38)	-	8 1/2 (216)	-	1/4 (6)	-	-	3 1/4 (83)	-
BS 10														
Table A	11 (279)	9 1/4 (235)	4	5/8 (16)	11/16 (17)	11/16 (17)	-	-	-	-	13/16 (21)	11/16 (17)	-	-
Table D	11 (279)	9 1/4 (235)	8	5/8 (16)	11/16 (17)	11/16 (17)	-	-	-	-	13/16 (21)	11/16 (17)	11/16 (17)	-
Table E	11 (279)	9 1/4 (235)	8	3/4 (19)	7/8 (22)	7/8 (22)	-	-	-	-	7/8 (22)	11/16 (17)	11/16 (17)	-
Table F	12 (305)	10 1/4 (260)	12	3/4 (19)	7/8 (22)	7/8 (22)	-	-	-	-	1 (25)	7/8 (22)	7/8 (22)	-
Table H	12 (305)	10 1/4 (260)	12	3/4 (19)	7/8 (22)	7/8 (22)	-	8 1/4 (210)	-	1/16 (2)	1 3/8 (35)	1 (25)	1 1/8 (29)	-

* These flange thicknesses are also valid for ductile iron flanges type 21-2

*** Copper alloy flanges are always flat-faced

120121

Nominal Size 8" (200mm)

BS EN 1092	Dia. of flange	Bolt circle diameter	No. of bolts	Dia. of bolts	Dia. of holes Iron	Dia. of holes Steel	Dia. of raised face(3) Iron	Dia. of raised face(3) Steel	Height of raised face(3) Iron	Height of raised face(3) Steel	Thickness of flange			
											Grey Cast Iron	Copper Alloy	Cast and Forged Steel	Ductile Cast Iron
PN 6	320	280	8	M16	19	18	254	258	3	2	22 (1)	-	20	-
PN10	340	295	8	M20	23	22	266	268	3	2	26 (1)	-	24	20
PN16	340	295	12	M20	23	22	266	268	3	2	30 (1)	-	24	20
PN25	360	310	12	M24	28	26	274	278	3	2	34 (1)	-	30	22
PN40	375	320	12	M27	31	30	284	285	3	2	-	-	34	30
PN64	415	345	12	M33	-	36	-	285	-	2	-	-	42	-
PN100	430	360	12	M33	-	36	-	285	-	2	-	-	52	-
ANSI														
Class 125/150	13 1/2 (343)	11 3/4 (298)	8	3/4 (19)	7/8 (22)	7/8 (22)	-	10 5/8 (270)	-	1/16 (2)	1 1/8 (29)	15/16 (24)	1 1/8 (29)	-
Class 300	15 (381)	13 (330)	12	7/8 (22)	-	1 (25)	-	10 5/8 (270)	-	1/16 (2)	-	1 3/8 (35)	1 5/8 (41)	-
Class 600	16 1/2 (419)	13 3/4 (349)	12	1 1/8 (29)	-	1 1/4 (32)	-	10 5/8 (270)	-	1/4 (6)	-	-	2 3/16 (56)	-
Class 900	18 1/2 (470)	15 1/2 (394)	12	1 3/8 (35)	-	1 1/2 (38)	-	10 5/8 (270)	-	1/4 (6)	-	-	2 1/2 (64)	-
Class 1500	19 (438)	15 1/2 (394)	12	1 5/8 (41)	-	1 3/4 (44)	-	10 5/8 (270)	-	1/4 (6)	-	-	3 5/8 (92)	-
BS 10														
Table A	13 1/4 (337)	11 1/2 (292)	8	5/8 (16)	11/16 (17)	11/16 (17)	-	-	-	-	7/8 (22)	3/4 (19)	1/2 (13)	-
Table D	13 1/4 (337)	11 1/2 (292)	8	5/8 (16)	11/16 (17)	11/16 (17)	-	-	-	-	7/8 (22)	3/4 (19)	3/4 (19)	-
Table E	13 1/4 (337)	11 1/2 (292)	8	3/4 (19)	7/8 (22)	7/8 (22)	-	-	-	-	1 (25)	3/4 (19)	3/4 (19)	-
Table F	14 1/2 (368)	12 3/4 (324)	12	3/4 (19)	7/8 (22)	7/8 (22)	-	-	-	-	1 1/8 (29)	1 (25)	1 (25)	-
Table H	14 1/2 (368)	12 3/4 (324)	12	3/4 (19)	7/8 (22)	7/8 (22)	-	10 1/4 (260)	-	1/16 (2)	1 1/2 (38)	1 1/4 (32)	1 1/4 (32)	-

* These flange thicknesses are also valid for ductile iron flanges type 21-2

*** Copper alloy flanges are always flat-faced

Nominal Size 10" (250mm)

BS EN 1092	Dia. of flange	Bolt circle diameter	No. of bolts	Dia. of bolts	Dia. of holes Iron	Dia. of holes Steel	Dia. of raised face*** Iron	Dia. of raised face*** Steel	Height of raised face*** Iron	Height of raised face*** Steel	Thickness of flange			
											Grey Cast Iron	Copper Alloy	Cast and Forged Steel	Ductile Cast Iron
PN6	375	335	12	M16	19	18	309	312	3	2	24*	-	22	-
PN10	395**	350	12	M20	23	22	319	320	3	2	28*	-	26	22
PN16	405**	355	12	M24	28	26	319	320	3	2	32*	-	26	22
PN25	425	370	12	M27	31	30	330	335	3	2	-	-	32	24.5
PN40	450	385	12	M30	34	33	345	345	3	2	-	-	38	34.5
PN64	470	400	12	M33	-	36	-	345	-	2	-	-	46	-
PN100	505	430	12	M36	-	39	-	345	-	2	-	-	60	-
ANSI														
Class 125/150	16 (406)	14 1/4 (362)	12	7/8 (22)	1 (25)	1 (25)	-	12 3/4 (324)	-	1/16 (2)	1 3/16 (30)	1 (25)	1 3/16 (30)	-
Class 300	17 1/2 (445)	15 1/4 (387)	16	1 (25)	-	1 1/8 (29)	-	12 3/4 (324)	-	1/16 (2)	-	-	1 7/8 (41)	-
Class 600	20 (508)	17 (432)	16	1 1/4 (32)	-	1 3/8 (35)	-	12 3/4 (324)	-	1/4 (6)	-	-	2 1/2 (64)	-
Class 900	21 1/2 (546)	18 1/2 (470)	16	1 3/8 (35)	-	1 1/2 (38)	-	12 3/4 (324)	-	1/4 (6)	-	-	2 3/4 (70)	-
Class 1500	23 (584)	19 (483)	12	1 7/8 (41)	-	2 (51)	-	12 3/4 (324)	-	1/4 (6)	-	-	4 1/4 (108)	-
BS 10														
Table A	16 (406)	14 (356)	8	3/4 (19)	7/8 (22)	7/8 (22)	-	-	-	-	15/16 (24)	3/4 (19)	-	-
Table D	16 (406)	14 (356)	8	3/4 (19)	7/8 (22)	7/8 (22)	-	-	-	-	1 (25)	3/4 (19)	3/4 (19)	-
Table E	16 (406)	14 (356)	12	3/4 (19)	7/8 (22)	7/8 (22)	-	-	-	-	1 (25)	7/8 (22)	7/8 (22)	-
Table F	17 (432)	15 (381)	12	7/8 (22)	1 (25)	1 (25)	-	-	-	-	1 1/8 (29)	1 (25)	1 (25)	-
Table H	17 (432)	15 (381)	12	7/8 (22)	1 (25)	1 (25)	-	12 1/4 (311)	-	1/16 (2)	1 5/8 (41)	1 3/8 (35)	1 3/8 (35)	-

* These flange thicknesses are also valid for ductile iron flanges type 21-2

** For ductile iron pipes and fittings the outside diameters shall be: for PN10, D = 400mm, for PN16, D = 400mm

*** Copper alloy flanges are always flat-faced

120121

Hattersley®

Technical Helpline UK: 0845 604 1790 MEA: +971 4 816 5800
Email UK: tech-enquiries@hattersley.com
MEA: mena-techenquiries@hattersley.com

Nominal Size 12" (300mm)

BS EN 1092	Dia. of flange	Bolt circle diameter	No. of bolts	Dia. of bolts	Dia. of holes Iron	Dia. of holes Steel	Dia. of raised face*** Iron	Dia. of raised face*** Steel	Height of raised face*** Iron	Height of raised face*** Steel	Thickness of flange			
											Grey Cast Iron	Copper Alloy	Cast and Forged Steel	Ductile Cast Iron
PN6	440	395	12	M20	23	22	363	365	4	2	24*	-	22	-
PN10	445**	400	12	M20	23	22	370	370	4	2	28*	-	26	24.5
PN16	460**	410	12	M24	28	26	370	378	4	2	32*	-	28	24.5
PN25	485	430	16	M27	31	30	389	395	4	2	40*	-	34	27.5
PN40	515	450	16	M30	34	33	409	410	4	2	-	-	42	39.5
PN64	530	460	16	M33	-	36	-	410	-	2	-	-	52	-
PN100	585	500	16	M39	-	42	-	410	-	2	-	-	68	-
ANSI														
Class 125/150	19 (483)	17 (432)	12	7/8 (22)	1 (25)	1 (25)	-	15 (381)	-	1/16 (2)	1 1/4 (32)	1 1/16 (27)	1 1/4 (32)	-
Class 300	20 1/2 (521)	17 3/4 (451)	16	1 1/8 (29)	-	1 1/4 (32)	-	15 (381)	-	1/16 (2)	-	-	2 (51)	-
Class 600	22 (559)	19 1/4 (489)	20	1 1/4 (32)	-	1 3/8 (35)	-	15 (381)	-	1/4 (6)	-	-	2 5/8 (67)	-
Class 900	24 (610)	21 (533)	20	1 3/8 (35)	-	1 1/2 (38)	-	15 (381)	-	1/4 (6)	-	-	3 1/8 (80)	-
Class 1500	26 1/2 (673)	22 1/2 (571)	16	2 (51)	-	2 1/8 (54)	-	15 (381)	-	1/4 (6)	-	-	4 7/8 (124)	-
BS 10														
Table A	18 (457)	16 (406)	8	3/4 (19)	7/8 (22)	7/8 (22)	-	-	-	-	15/16 (24)	7/8 (22)	-	-
Table D	18 (457)	16 (406)	12	3/4 (19)	7/8 (22)	7/8 (22)	-	-	-	-	1 (25)	7/8 (22)	7/8 (22)	-
Table E	18 (457)	16 (406)	12	7/8 (22)	1 (25)	1 (25)	-	-	-	-	1 1/8 (29)	1 (25)	1 (25)	-
Table F	19 1/4 (489)	17 1/4 (438)	16	7/8 (22)	1 (25)	1 (25)	-	-	-	-	1 1/4 (32)	1 1/8 (29)	1 1/8 (29)	-
Table H	19 1/4 (489)	17 1/4 (438)	16	7/8 (22)	1 (25)	1 (25)	-	14 1/4 (362)	-	1/16 (2)	1 3/4 (44)	1 1/2 (38)	1 1/2 (38)	-

* These flange thicknesses are also valid for ductile iron flanges type 21-2

** For ductile iron pipes and fittings the outside diameter shall be: for PN10, D = 455mm; for PN16, D = 455 mm

*** Copper alloy flanges are always flat-faced

Nominal Size 14" (350mm)

BS EN 1092	Dia. of flange	Bolt circle diameter	No. of bolts	Dia. of bolts	Dia. of holes Iron	Dia. of holes Steel	Dia. of raised face*** Iron	Dia. of raised face*** Steel	Height of raised face*** Iron	Height of raised face*** Steel	Thickness of flange			
											Grey Cast Iron	Copper Alloy	Cast and Forged Steel	Ductile Cast Iron
PN6	490	445	12	M20	23	22	413	415	4	2	26*	-	22	-
PN10	505	460	16	M20	23	22	429	430	4	2	30*	-	26	24.5
PN16	520	470	16	M24	28	26	429	438	4	2	36*	-	30	26.5
PN25	555	490	16	M30	34	33	448	450	4	2	44*	-	38	30
PN40	580	510	16	M33	37	36	465	465	4	2	-	-	46	44
PN64	600	525	16	M36	-	39	-	465	-	2	-	-	56	-
PN100	655	560	16	M45	-	48	-	465	-	2	-	-	74	-
ANSI														
Class 125/150	21 (533)	18 3/4 (476)	12	1 (25)	1 1/8 (29)	1 1/8 (29)	-	16 1/4 (413)	-	1/16 (2)	1 3/8 (35)	-	1 3/8 (35)	-
Class 300	23 (584)	20 1/4 (514)	20	1 1/8 (29)	-	1 1/4 (32)	-	16 1/4 (413)	-	1/16 (2)	-	-	2 1/8 (54)	-
Class 600	23 3/4 (603)	20 3/4 (527)	20	1 3/8 (35)	-	1 1/2 (38)	-	16 1/4 (413)	-	1/4 (6)	-	-	2 3/4 (70)	-
Class 900	25 1/4 (641)	22 (559)	20	1 1/2 (38)	-	1 5/8 (41)	-	16 1/4 (413)	-	1/4 (6)	-	-	3/8 (86)	-
Class 1500	29 1/2 (749)	25 (635)	16	2 1/4 (57)	-	2 3/8 (60)	-	16 1/4 (413)	-	1/4 (6)	-	-	5 1/4 (133)	-
BS 10														
Table A	20 3/4 (527)	18 1/2 (470)	8	7/8 (22)	1 (25)	1 (25)	-	-	-	-	1 (25)	1 (25)	-	-
Table D	20 3/4 (527)	18 1/2 (470)	12	7/8 (22)	1 (25)	1 (25)	-	-	-	-	1 1/8 (29)	1 (25)	1 (25)	-
Table E	20 3/4 (527)	18 1/2 (470)	12	7/8 (22)	1 (25)	1 (25)	-	-	-	-	1 1/4 (32)	1 (25)	1 (25)	-
Table F	21 3/4 (552)	19 1/2 (495)	16	1 (25)	1 1/8 (29)	1 1/8 (29)	-	-	-	-	1 3/8 (35)	1 1/4 (32)	1 1/4 (32)	-
Table H	21 3/4 (552)	19 1/2 (495)	16	1 (25)	1 1/8 (29)	1 1/8 (29)	-	16 1/2 (419)	-	1/16 (2)	1 7/8 (48)	1 5/8 (41)	1 5/8 (41)	-

* These flange thicknesses are also valid for ductile iron flanges type 21-2

*** Copper alloy flanges are always flat-faced

120121

Nominal Size 16" (400mm)

BS EN 1092	Dia. of flange	Bolt circle diameter	No. of bolts	Dia. of bolts	Dia. of holes Iron	Dia. of holes Steel	Dia. of raised face*** Iron	Dia. of raised face*** Steel	Height of raised face*** Iron	Height of raised face*** Steel	Thickness of flange			
											Grey Cast Iron	Copper Alloy	Cast and Forged Steel	Ductile Cast Iron
PN6	540	495	16	M20	23	22	463	465	4	2	28*	-	22	-
PN10	565	515	16	M24	28	26	480	482	4	2	32*	-	26	24.5
PN16	580	525	16	M27	31	30	480	490	4	2	38*	-	32	28
PN25	620	550	16	M33	37	36	503	505	4	2	48*	-	40	32
PN40	660	585	16	M36	41	39	535	535	4	2	-	-	50	48
PN64	670	585	16	M39	-	42	-	535	-	2	-	-	60	-
PN100	715	620	16	M45	-	48	-	535	-	2	-	-	78	-
ANSI														
Class 125/150	23 1/2 (597)	21 1/4 (540)	16	1 (25)	1 1/8 (29)	1 1/8 (29)	-	18 1/2 (470)	-	1/16 (2)	1 7/16 (37)	-	1 7/16 (37)	-
Class 300	25 1/2 (648)	22 1/2 (572)	20	1 1/4 (32)	-	1 3/8 (35)	-	18 1/2 (470)	-	1/16 (2)	-	-	2 1/4 (57)	-
Class 600	27 (686)	23 3/4 (603)	20	1 1/2 (38)	-	1 5/8 (41)	-	18 1/2 (470)	-	1/4 (6)	-	-	3 (76)	-
Class 900	27 3/4 (705)	24 1/4 (616)	20	1 5/8 (41)	-	1 3/4 (44)	-	18 1/2 (470)	-	1/4 (6)	-	-	3 1/2 (89)	-
Class 1500	32 1/2 (826)	27 3/4 (705)	16	2 1/2 (64)	-	2 5/8 (67)	-	18 1/2 (470)	-	1/4 (6)	-	-	5 3/4 (146)	-
BS 10														
Table A	22 3/4 (578)	20 1/2 (521)	12	7/8 (22)	1 (25)	1 (25)	-	-	-	-	1 1/16 (27)	1 (25)	-	-
Table D	22 3/4 (578)	20 1/2 (521)	12	7/8 (22)	1 (25)	1 (25)	-	-	-	-	1 1/8 (29)	1 (25)	1 (25)	-
Table E	22 3/4 (578)	20 1/2 (521)	12	7/8 (22)	1 (25)	1 (25)	-	-	-	-	1 1/4 (32)	1 (25)	1 (25)	-
Table F	24 (610)	21 3/4 (552)	20	1 (25)	1 1/8 (29)	1 1/8 (29)	-	-	-	-	1 3/8 (35)	1 1/4 (32)	1 1/4 (32)	-
Table H	24 (610)	21 3/4 (552)	20	1 (25)	1 1/8 (29)	1 1/8 (29)	-	19 (483)	-	1/16 (2)	2 (51)	1 3/4 (44)	1 3/4 (44)	-

* These flange thicknesses are also valid for ductile iron flanges type 21-2

*** Copper alloy flanges are always flat-faced

Nominal Size 18" (450mm)

BS EN 1092	Dia. of flange	Bolt circle diameter	No. of bolts	Dia. of bolts	Dia. of holes Iron	Dia. of holes Steel	Dia. of raised face*** Iron	Dia. of raised face*** Steel	Height of raised face*** Iron	Height of raised face*** Steel	Thickness of flange			
											Grey Cast Iron	Copper Alloy	Cast and Forged Steel	Ductile Cast Iron
PN6	595	550	16	M20	23	22	518	520	4	2	28*	-	22	-
PN10	615	565	20	M24	28	26	530	532	4	2	32*	-	28	25.5
PN16	640	585	20	M27	31	30	548	550	4	2	40*	-	40	30
PN25	670	600	20	M33	37	36	548	555	4	2	50*	-	46	34.5
PN40	685	610	20	M36	41	39	560	560	4	2	-	-	57	49
PN64	-	-	-	-	-	-	-	-	-	-	-	-	-	-
PN100	-	-	-	-	-	-	-	-	-	-	-	-	-	-
ANSI														
Class 125/150	25 (635)	22 3/4 (578)	16	1 1/8 (29)	1 1/4 (32)	1 1/4 (32)	-	21 (533)	-	1/16 (2)	1 9/16 (40)	-	1 9/16 (40)	-
Class 300	28 (711)	24 3/4 (629)	24	1 1/4 (32)	-	1 3/8 (35)	-	21 (533)	-	1/16 (2)	-	-	2 3/8 (60)	-
Class 600	29 1/4 (743)	25 3/4 (654)	20	1 5/8 (41)	-	1 3/4 (44)	-	21 (533)	-	1/4 (6)	-	-	3 1/4 (83)	-
Class 900	31 (787)	27 (686)	20	1 7/8 (48)	-	2 (51)	-	21 (533)	-	1/4 (6)	-	-	4 (102)	-
Class 1500	36 (914)	30 1/2 (775)	16	2 3/4 (70)	-	2 7/8 (73)	-	21 (533)	-	1/4 (6)	-	-	6 3/8 (162)	-
BS 10														
Table A	25 1/4 (641)	23 (584)	12	7/8 (22)	-	1 (25)	-	-	-	-	1 1/16 (27)	1 1/16 (27)	-	-
Table D	25 1/4 (641)	23 (584)	12	7/8 (22)	-	1 (25)	-	-	-	-	1 1/4 (32)	1 1/8 (29)	1 1/8 (29)	-
Table E	25 1/4 (641)	23 (584)	16	7/8 (22)	-	1 (25)	-	-	-	-	1 3/8 (35)	1 1/8 (29)	1 1/8 (29)	-
Table F	26 1/2 (673)	24 (610)	20	11/8 (29)	-	1 1/4 (32)	-	-	-	-	1 1/2 (38)	1 3/8 (35)	1 3/8 (35)	-
Table H	26 1/2 (673)	24 (610)	20	11/8 (29)	-	1 1/4 (32)	-	21 (533)	-	1/16 (2)	2 1/8 (54)	1 7/8 (48)	1 7/8 (48)	-

* These flange thicknesses are also valid for ductile iron flanges type 21-2

*** Copper alloy flanges are always flat-faced

120121

Hattersley®

Technical Helpline UK: 0845 604 1790 MEA: +971 4 816 5800
Email UK: tech-enquiries@hattersley.com
MEA: mena-techenquiries@hattersley.com

Nominal Size 20" (500mm)

BS EN 1092	Dia. of flange	Bolt circle diameter	No. of bolts	Dia. of bolts	Dia. of holes Iron	Dia. of holes Steel	Dia. of raised face*** Iron	Dia. of raised face*** Steel	Height of raised face(3) Iron	Height of raised face*** Steel	Thickness of flange			
											Grey Cast Iron	Copper Alloy	Cast and Forged Steel	Ductile Cast Iron
PN6	645	600	20	M20	23	22	568	570	4	2	30*	-	24**	-
PN10	670	620	20	M24	28	26	582	585	4	2	34*	-	28**	26.5
PN16	715	650	20	M30	34	33	609	610	4	2	42*	-	44**	31.5
PN25	730	660	20	M33	37	36	609	615	4	2	52*	-	48**	36.5
PN40	755	670	20	M39	44	42	615	615	4	2	-	-	57**	52
PN64	800	705	20	M45	-	48	-	615	-	2	-	-	68**	-
PN100	870	760	20	M52	-	56	-	615	-	2	-	-	94**	-
ANSI														
Class 125/150	27 1/2 (699)	25 (635)	20	1 1/8 (29)	1 1/4 (32)	1 1/4 (32)	-	23 (584)	-	1/16 (2)	1 11/16 (43)	-	1 11/16 (43)	-
Class 300	30 1/2 (775)	27 (686)	24	1 1/4 (32)	-	1 3/8 (35)	-	23 (584)	-	1/16 (2)	-	-	2 1/2 (64)	-
Class 600	32 (813)	28 1/2 (724)	24	1 5/8 (41)	-	1 3/4 (44)	-	23 (584)	-	1/4 (6)	-	-	3 1/2 (89)	-
Class 900	33 3/4 (857)	29 1/2 (749)	20	2 (51)	-	2 1/8 (54)	-	23 (584)	-	1/4 (6)	-	-	4 1/4 (108)	-
Class 1500	38 3/4 (984)	32 3/4 (832)	16	3 (76)	-	3 1/8 (79)	-	23 (584)	-	1/4 (6)	-	-	7 (178)	-
BS 10														
Table A	27 3/4 (705)	25 1/4 (641)	12	7/8 (22)	1 (25)	1 (25)	-	-	-	-	1 1/8 (29)	1 1/8 (29)	-	-
Table D	27 3/4 (705)	25 1/4 (641)	16	7/8 (22)	1 (25)	1 (25)	-	-	-	-	1 1/4 (32)	1 1/4 (32)	-	-
Table E	27 3/4 (705)	25 1/4 (641)	16	7/8 (22)	1 (25)	1 (25)	-	-	-	-	1 1/2 (38)	1 1/4 (32)	1 1/4 (32)	-
Table F	29 (737)	26 1/2 (673)	24	1 1/8 (29)	1 1/4 (32)	1 1/4 (32)	-	-	-	-	1 5/8 (41)	1 1/2 (38)	1 1/2 (38)	-
Table H	29 (737)	26 1/2 (673)	24	1 1/8 (29)	1 1/4 (32)	1 1/4 (32)	-	23 1/2 (597)	-	1/16 (2)	2 1/4 (57)	2 (51)	2 (51)	-

* These flange thicknesses are also valid for ductile iron flanges type 21-2

** These flange thicknesses are changed substantially as a result of the flange calculation method used in BS EN 1092-1

*** Copper alloy flanges are always flat-faced

Nominal Size 24" (600mm)

BS EN 1092	Dia. of flange	Bolt circle diameter	No. of bolts	Dia. of bolts	Dia. of holes Iron	Dia. of holes Steel	Dia. of raised face*** Iron	Dia. of raised face*** Steel	Height of raised face*** Iron	Height of raised face*** Steel	Thickness of flange			
											Grey Cast Iron	Copper Alloy	Cast and Forged Steel	Ductile Cast Iron
PN6	755	705	20	M24	28	26	667	670	5	2	30*	-	30	-
PN10	780	725	20	M27	31	30	682	685	5	2	36*	-	34	30
PN16	840	770	20	M33	37	36	720	725	5	2	48*	-	54	36
PN25	845	770	20	M36	41	39	720	720	5	2	-	-	58	42
PN40	890	795	20	M45	50	48	735	735	5	2	-	-	72	58
PN64	930	820	20	M52	-	56	-	735	-	2	-	-	76	-
ANSI														
Class 125/150	32 (813)	29 1/2 (749)	20	1 1/4 (32)	1 3/8 (35)	1 3/8 (35)	-	27 1/4 (692)	-	1/16 (2)	1 7/8 (48)	-	1 7/8 (48)	-
Class 300	36 (914)	32 (813)	24	1 1/2 (38)	-	1 5/8 (41)	-	27 1/4 (692)	-	1/16 (2)	-	-	2 3/4 (70)	-
Class 600	37 (940)	33 (838)	24	1 7/8 (48)	-	2 (51)	-	27 1/4 (692)	-	1/4 (6)	-	-	4 (102)	-
Class 900	41 (1041)	35 1/2 (902)	20	2 1/2 (64)	-	2 5/8 (67)	-	27 1/4 (692)	-	1/4 (6)	-	-	5 1/2 (140)	-
Class 1500	46 (1168)	39 (991)	16	3 1/2 (89)	-	3 5/8 (92)	-	27 1/4 (692)	-	1/4 (6)	-	-	8 (203)	-
BS 10														
Table A	32 1/2 (826)	29 3/4 (756)	12	1 (25)	1 1/8 (29)	1 1/8 (29)	-	-	-	-	1 3/16 (30)	1 3/16 (30)	-	-
Table D	32 1/2 (826)	29 3/4 (756)	16	1 (25)	1 1/8 (29)	1 1/8 (29)	-	-	-	-	1 3/8 (35)	1 3/8 (35)	1 3/8 (35)	-
Table E	32 1/2 (826)	29 3/4 (756)	16	1 1/8 (29)	1 1/4 (32)	1 1/4 (32)	-	-	-	-	1 5/8 (41)	1 1/2 (38)	1 1/2 (38)	-
Table F	33 1/2 (851)	30 3/4 (781)	24	1 1/4 (32)	1 1/4 (32)	1 3/8 (35)	-	-	-	-	1 3/4 (44)	1 5/8 (41)	1 5/8 (41)	-
Table H	33 1/2 (851)	30 3/4 (781)	24	1 1/4 (32)	1 3/8 (35)	1 3/8 (35)	-	27 1/2 (699)	-	1/16 (2)	2 1/2 (64)	2 1/4 (57)	2 1/4 (57)	-

* These flange thicknesses are also valid for ductile iron flanges type 21-2

** These flange thicknesses are changed substantially as a result of the flange calculation method used in BS EN 1092-1

*** Copper alloy flanges are always flat-faced

120121

Typical Kv Values

BALL VALVE
ie. Fig. 100

Size	Kv
15	31
20	45
25	63
32	102
40	375
50	420

BUTTERFLY VALVE
ie. Fig. 970

Size	Kv
65	227
80	350
100	696
125	1186
150	1832
200	3638
250	6194
300	9570
350	8163
400	12083
450	14169
500	18512
600	24208

GATE VALVE
ie. Fig. 30 (Copper alloy)

Size	Kv
15	14
20	32
25	57
32	90
40	129
50	230

GATE VALVE
ie. Fig. M541 (Iron)

Size	Kv
65	360
80	519
100	923
125	1443
150	2077
200	3693
250	5771
300	8310

CHECK VALVE
ie. Fig. 47 (Copper alloy)

Size	Kv
15	6.61
20	17.75
25	29.35
32	37.82
40	62.1
50	114

CHECK VALVE
ie. Fig. M651 (Iron)

Size	Kv
65	187
80	496
100	599
125	799
150	1428
200	2129
250	2725
300	3850

GLOBE VALVE
ie. Fig. 5 (Copper alloy)

Size	Kv
15	3.05
20	5.71
25	10
32	14.22
40	18.79
50	34.23

GLOBE VALVE
ie. Fig. 731 (Iron)

Size	Kv
65	71
80	109
100	168
125	264
150	380
200	676
250	1065
300	1515

STRAINER
ie. Fig. 807 (Copper alloy)

Size	Kv
15	5.6
20	8.5
25	15.1
32	26.4
40	31.9
50	52.5

STRAINER
ie. Fig. 822 (Iron)

Size	Kv
50	59
65	93
80	136
100	229
125	363
150	499
200	817
250	1361
300	1928

120121

Hattersley®
Technical Helpline UK: 0845 604 1790 MEA: +971 4 816 5800
Email UK: tech-enquiries@hattersley.com
MEA: mena-techenquiries@hattersley.com

Quality Assurance

Rigid quality control and inspection at all stages of manufacture ensure that Hattersley products are suitable for their intended application and will give reliable service. Every valve and pipe fitting is individually tested in accordance with the relevant product standard.

Hattersley is an approved manufacturer under various quality schemes, including the British Standard Institution (BSI) Kitemark, and is ISO9001 accredited. In addition, the company has been approved and/or listed by various user organisations including the United Kingdom Water Fittings by laws scheme and other third party organisations.

WRAS APPROVED PRODUCT

The purpose of WRAS is to contribute to the protection of public health by preventing contamination of public water supplies and encouraging the efficient use of water by promoting and facilitating compliance with the Water Supply (Water Fittings) Regulations and Byelaws in Scotland.

Valves which are designated WRAS approved products are listed on the WRAS website. Many Hattersley valves have been tested and certified as being WRAS approved and are listed under the Approved Products Directory.

Firm of Assessed Capability

BS EN/ISO 9001 is the reference Standard for Quality Systems.

The Kitemark

The Kitemark is a registered trademark owned by British Standards Institution and may only be used by manufacturers who are approved licensees and whose products fully comply with the individual product standards.

Product audits and regular surveillance visits by BSI ensure continuing compliance with specification requirements and confirm acceptable Quality Systems to BS EN ISO 9001:2015.

Pressure Equipment Directive

All Hattersley products have been assessed in accordance with the Pressure Equipment Directive (PED) 2014/68/EU.

Currently, each product has been classified into a conformity assessment category based on the intended fluid contents – gas or liquid, the classification of the intended fluid contents – Group 1 or Group 2, and the maximum allowable pressure and the nominal size (DN).

Hattersley products fall into either the 'Sound Engineering Practice' (SEP), Category 1, Category 2, Category 3, or category 4. According to the directive, products classified as 'SEP' shall not be CE marked.

Category 1 products will bear the CE mark and those products classified as Categories 2, 3 and 4 will bear the CE mark plus the number 0041.

The number 0041 is that of Bureau Veritas who Hattersley have chosen as their 'Notified Body' to monitor their quality assurance system as required by the directive.

CLASSIFICATION OF GASES AND LIQUIDS

Gases	Liquids
GROUP ONE	**GROUP ONE**
• Explosive	• Explosive
• Extremely Flammable	• Extremely Flammable
• Highly Flammable	• Highly Flammable
• Very Toxic	• Very Toxic
• Toxic	• Toxic
• Oxidising	• Oxidising
GROUP TWO	**GROUP TWO**
• Others	• Others (including steam)

021219

Hattersley Projects

Project	Sector	Page
A4 Tower, Dubai	Residential	Cover
World Cup Stadiums, Qatar	Sports	6
Great Sutton (Data Centre), London	Commercial	7
Leadenhall, London	Commercial	10
Blue Water Island, Dubai	Mixed Use	28-29
Burj Al Arab Island Extension	Hotels	32-33
The Poultry Hotel	Hotels	41
One Bank Street, London	Commercial	54
The Post Building, London	Commercial	55
European Bank for Reconstruction and Development	Commercial	77
Fakeeh Academic Medical Centre, Dubai	Hospitals & Healthcare	78-79
Blackfriars Railway Station, London	Infrastructure	96-97
The Place (next to The Shard), London	Commercial	109
Leadenhall, London	Commercial	110
North East Energy Recovery Centre (NEERC)	Public Sector	130-131
The Royal Marsden Hospital	Hospitals & Healthcare	132
Wheelock Square Tower, Shanghai	Commercial	143
Ricoh Arena, Coventry	Sports	152-153
Tiara Towers, Dubai	Hotels	169
Henrietta House, London	Commercial	170

Hattersley®

Technical Helpline UK: 0845 604 1790 MEA: +971 4 816 5800
Email UK: tech-enquiries@hattersley.com
MEA: mena-techenquiries@hattersley.com

Figure Number Index

Fig. No. Page

BALANCING VALVES

Static

631 12
1000 13
1000L & 1000M 14
1432, 1432L, 1432C, 1432LC 15
1732, 1732M, 1732L, 1732C, 1732MC, 1732LC 16
M2000 17
M2000 18
M3000 19
MH733 / MHA733 20
MH737 / MHA737 21
MH739 / MHA739 22
953 & 953G 23
4923 & 4923G 24

GENERAL VALVES

Air Vents/De-Aerators

775 & 776 31

Ball Valves

100 & 100EXT 35
100TH & 100LS 36
100HU 37
100YL 38
113 39
116 & 116EXT 40

Butterfly Valves

950 & 950G 43
950W & 950WG 44
970 & 970G 45
970W & 970WG 46
951 & 951G 47
971 & 971G 48
4970 & 4970G 49
980 ANSI 50
4925 & 4925G 51
4930G / 5930G / 4930BS 52
4930G / 5930G / 4930BS ANSI 53

Butterfly Valves for Heating & Chilled Water Systems

2850L / 2851L / 3850L / 3851L / 4850L / 4851L 57
2850G / 2851G / 3850G / 3851G / 4850G / 4851G 58
2870ML / 2871ML / 3870ML / 3871ML / 4870ML / 4871ML 59
2870MG / 2871MG / 3870MG / 3871MG / 4870MG / 4871MG 60
2870AL / 2871AL / 3870AL / 3871AL / 4870AL / 4871AL 61
2870AG / 2871AG / 3870AG / 3871AG / 4870AG / 4871AG 62
3873MG 63

Check Valves

42 65
44 66
1013 67
47 68
3047 69
3047W 70
250W & 250CW 71
160W 72
260W 73
M650 74
M651, 651E, 651ANSI 75
861 (PN16) / 861A (ANSI 125) / 866 (PN25) / 861W (PN16) 76

Gate Valves

33X & 33XLS 81
30 & 30LS 82
30C & 30CLS 83
C31 84
33 85
669 86
609 87
35 88
589 HW & 589 SA 89
M511 90
M541 91
M544 92
M540 93
501 94
504 95

Gland Cocks/Drain Taps

371 99
370 100
81HU 101

Globe Valves

C4 103
5 104
5N & 5NLS 105
23 106
17 107
731 108

Fig. No. Page

Press-Fit Valves

1432.PF 116
1732.PF 117
100.PF 118
47.PF 119
817.PF 120
114.PF 121

Strainers

807 123
817 124
827 125
822 & 922 / 810 & 910 126
811 & 911 127
816W 128
825W 129

Fig. No. Page

PUBLIC HEALTH RANGE

Strainers

816W 134
825W 135

Double Regulating Valve

973W 136

Bronze - Swing Pattern

3047W 137

Pressure Reducing Valve

416 138
425 139
425 140
M416 & M425 141

Thermal Circulation Valve

2900 & 2910 147
77 150
78 151

Technical Helpline UK: 0845 604 1790 MEA: +971 4 816 5800
Email UK: tech-enquiries@hattersley.com
MEA: mena-techenquiries@hattersley.com

Project: Tiara Towers

Sector: Hotel and offices

Contractor: Al Shirawi Contractors

Specification: Due to the height of the building of nearly 200m, Hattersley worked closely with the Consultant and Contractor to ensure that the correct products were selected for the Chilled Water System requirements. The CWP for the height of the Towers was calculated at 25 Bar, and Hattersley Valves offered a complete range of valves to meet with the site requirements including isolation, balancing, strainer and check valves. Hattersley Valves were also selected for the other Chilled Water Services throughout the project.

S Shand-Brown

Project: Henrietta House, London
Sector: Commercial
Client: CB Richard Ellis of London
Contractor: Silverline Engineering
Distributor: T G Lynes
Specification: Range of Hattersley Isolation Valves

A range of Isolating Valves have been specified for installation within the fancoils of Henrietta House, a prestigious office development in London's West End. The building has been refurbished and CB Richard Ellis of London has relocated its headquarters to the office.

The building is 7 floors tall and provides 9000m^2 of luxurious office space. The Hattersley valves, including the newly designed Fig. 100 Ball Valve range, will control the heating and cooling of each floor. Hattersley was selected because its valves are light, compact and easy to install and operate. For Silverline Engineering, the fact that design features include improved leak protection and resistance to damage on site, will ensure a long and maintenance-free life expectancy.

Hattersley®
Technical Helpline UK: 0845 604 1790 MEA: +971 4 816 5800
Email UK: tech-enquiries@hattersley.com
MEA: mena-techenquiries@hattersley.com

NABIC™

Today, Hattersley is a leading brand of Crane Building Services & Utilities, & is joined by complementary building services brand NABIC

NABIC manufacture in the UK a range of safety and pressure relief valves as well as control valves in gunmetal and stainless steel suitable for a wide variety of fluids including steam, hot water and air. NABIC valves are ideal for vented and unvented heating systems, hot water and steam boilers, compressed air systems, pump relief and bypass.

NABIC valves are available to buy online direct at:

www.nabicvalves.com

Our Heritage

NABIC roots date back to Manchester in 1864 - the Victorian age of steam and breath-taking industrial advancement.

NABIC is an acronym for National Boiler Insurance Company and came into existence due to of a rising tide of boiler explosions which were causing extensive damage to commercial properties and considerable loss of life.

19112023

Distributor details

To visit our Video Library go to:

YouTube

www.youtube.com/user/hattersleyvalves

PRINTED ON PAPER FROM
SUSTAINABLE SOURCES

ISO 9001 Quality Management — FM00311
ISO 14001 Environmental Management — EMS 553775

HATTERSLEY 11-15 EPSILON TERRACE,
WEST ROAD, IPSWICH IP3 9FJ
HOME SALES: +44 (0)1473 277410
TECHNICAL HELPLINE: +44(0)1473 277400
FAX: +44(0)1473 277411

UK Sales enquires: uksales@hattersley.com
Technical enquires: tech-enquiries@hattersley.com

www.hattersley.com

MIDDLE EAST, ASIA & AFRICA SALES OFFICE
BUILDING 4, OFFICE 901, THE GALLERIES
DOWNTOWN JEBEL ALI, DUBAI PO BOX 17415
SALES: +9714 816 5800

Email: Mena-enquiries@hattersley.com

Printed in the UK

FLOW OF FLUIDS
www.flowoffluids.com

Visit **www.flowoffluids.com** to order your copy of the New Technical Paper 410.

- Designed and manufactured under quality management systems in accordance with BS EN 9001.
- For full terms and conditions, please visit our website.
- We hope our communications have an impact on you - but not the environment - we have taken steps to ensure this brochure is printed on Forestry Stewardship Council material and the paper is made by an elemental chlorine free process.

Every effort has been made to ensure that the information contained in this publication is accurate at the time of publishing. Hattersley Ltd assumes no responsibility or liability for typographical errors or omissions or for any misinterpretation of the information within the publication and reserves the right to change without notice.

JANUARY 2024

FUTURE VALVE TECHNOLOGY